Hybrid Inverter User Manual

LXP-LB-EU 12K

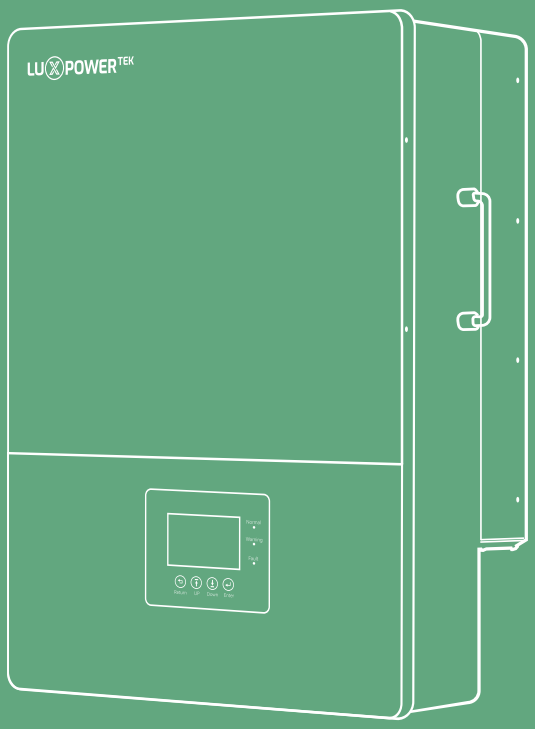

LUXPOWERTEK

Version: UM-LXP02002E01

Copyright© 2024 Lux Power Technology Co., Ltd. All Rights Reserved. This manual, protected by the copyright and intellectual property rights of Lux Power Technology, may not be modified, copied, or reproduced without prior written permission. Brands and trademarks mentioned belong to their respective owners. Read carefully for product reliability and warranty eligibility. For warranty details, refer to Lux Power Technology Limited Warranty. Intended for professional service providers; no statements constitute an express or implied warranty.

Descriptions may contain predictive statements; differences may occur. Provided for reference, subject to change without notice by Lux Power Technology.

Website

YouTube

Facebook

www.luxpowertek.com

Scan to download

Table Of Contents

1. Safety · · · 1

1.1 Safety Instruction · · · 1

2. Brief Introduction · · · 3

2.1 System Solution · · · 3

3. Installation · · · 4

3.1 Packaging List · · · 4

3.2 Location Selection and Installation · · · 4

3.2.1 Requirements for installation location · · · 4

3.2.2 Installing the inverter · · · 6

3.3 Connection Overview · · · 7

3.3.1 System connection · · · 7

3.4 PV Connection · · · 9

3.5 Battery Connection · · · 10

3.5.1 Battery power cable connection · · · 10

3.5.2 Battery communication cable connection · · · 11

3.6 Grid&EPS load Connection · · · 12

3.6.1 Grid type selection · · · 12

3.6.2 Grid and EPS load connection for split-phase service · · · 13

3.6.3 AC cable connection · · · 14

3.6.4 CT/Meter connection · · · 14

3.7 Working with Generator · · · 17

3.7.1 Generator system connection · · · 17

3.7.2 Generator Startup and stop settings · · · 18

3.8 AC Coupling Installation Connection · · · 19

3.9 Parallel System Connection · · · 20

3.9.1 Connection for paralleling system · · · 20

3.9.2 Parallel information display · · · 23

3.10 Monitor System Setup · · · 23

3.10.1 Wifi/GPRS/4G/WLAN dongle connection ·23
3.10.2 Setup the Monitor system ·24
3.10.3 Set homewifi password to dongle ·24
3.10.4 Third party RS485 communication ·25
4. Operation Guide ·26
4.1 Operation Mode ·26
4.1.1 Self-usage mode (Default) ·26
4.1.2 Charge first mode ·28
4.1.3 AC charge mode ·28
4.1.4 Grid peak-shaving Function ·28
4.1.5 Smart load Function 28
4.2 LCD Display 29
4.2.1 Viewing information and alarm/fault record ·29
4.2.2 Setting parameters ·30
4.3 Start-up and shut down the inverter ·33
4.3.1 Start up the inverter 33
4.3.2 Shut down the inverter ·34
5. Troubleshooting & Maintenance ·34
5.1 Regular Maintenance 34
5.2 LED Displays ·34
5.3 Troubleshooting Based On LCD Displays 34
5.4 Fan replacement 37

Revision History

Version	Date	Description
Version: UM-LXP02002E01	2024.08.06	First official release.

1. Safety

1.1 Safety Instruction

General Safety Instructions

The inverter has been designed and tested strictly according to international safety regulations. Read all safety instructions carefully prior to any work and observe them at all times when working on or with the inverter. The operator must be qualified personnel and the installation must be capable with relevant national or international standards or regulations.

Incorrect operation or work may cause:

- injury or death to the operator or a third party.
- damage to the inverter and other properties belonging to the operator or a third party.

Important Safety Notifications

There are many safety issues need to be carefully notified before, during and after the installation, and also in future operation and maintenance, following is important safety notifications to operator, owner and user of this product in appropriate usage.

⚠ DANGER

Dangers of High Voltages and Large Current

- Beware of high PV voltage. Please turn-off the DC switch of PV Panel output before and during the installation to avoid electric shock.
- Beware of high grid voltage. Please turn-off the AC switch of grid connection before and during the installation to avoid electric shock.
- Beware of large current of the battery output. Please turn-off the battery module before and during the installation to avoid electric shock.
- Do not open the inverter when it's working to avoid electric shock and damages from live voltage and current from the system.
- Do not operate the inverter when it's working, only the LCD and buttons can be touched in limited cases by qualified personnel, other parts of the inverter can be touched when the inverter is under a safe state (e.g. fully shut-down).
- Do not connect or disconnect any connections (PV, battery, grid, communication etc.) of the inverter when it's working.
- Make sure the inverter is well grounding, an operator should make sure himself is good protected by reasonable and professional insulation measurements (e.g. personal protective equipment (PPE)).
- Inspect relevant existed wiring on-site of the installation is under good condition before installation, operation or maintenance.
- Inspect the connections are good between inverter and PV, battery and grid during installation to prevent damages or injuries caused by bad connections.

WARNING

Avoid misoperation and Inappropriate Usage

- All the work of this product (system design, installation, operation, setting, configuration and maintenance must be carried out by qualified personnel as required.
- All connections must be in accordance with local and national regulations and standards.
- The inverter and system can inter-connected with the utility grid only if the utility grid permits it.
- All the warning labels or nameplates on the inverter must be clearly visible and must not be removed, covered or pasted.
- The installation should consider the safety of future users when choosing the right position and location as specified in this manual.
- Please keep the children away from touching or misusing the inverter and relevant systems.
- Beware of burning hurt, the inverter and some parts of the system could be hot when working, please do not touch the inverter surface or most of the parts when they are working. During inverter working states, only the LCD and buttons could be touched.

NOTICE

- Please carefully read this manual before any work is carried out on this inverter, the installation, please keep this manual carefully stored and easy to access at any time.
- The qualified personnel should have had training in the installation and commissioning of the electrical system as well as dealing with hazards, also they should have the knowledge of the manual and other related documents. As the installer or operator they are required to be familiar with local regulations and directives.

2. Brief Introduction

2.1 System Solution

This product and relevant system is suitable for following system applications (system diagram):

A. Solar and battery storage system

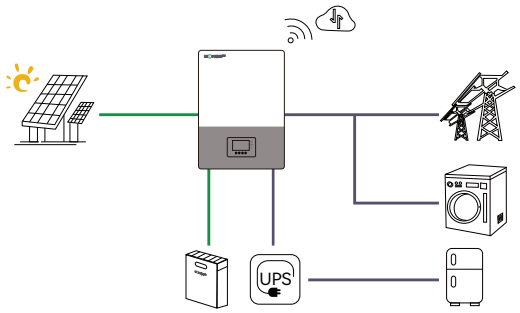

B. AC Coupling with existed solar system

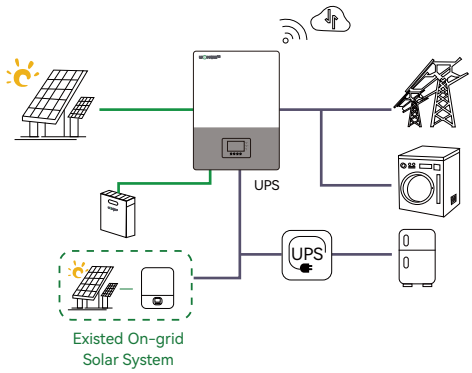

C. On-grid solar system without battery
(Support EPS even without battery)

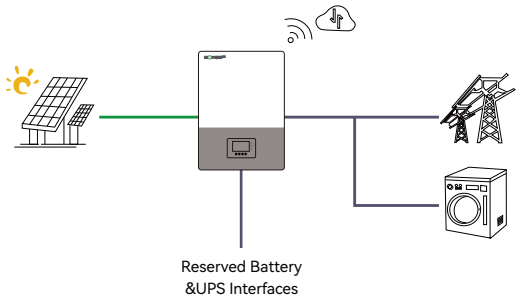

D. Off-grid and back-up applications

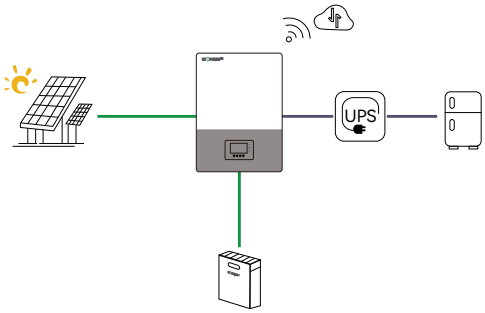

E. Single and three phase paralleling system

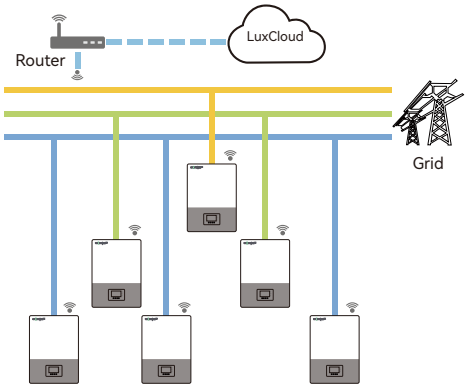

F. Energy storage system with peak shaving function

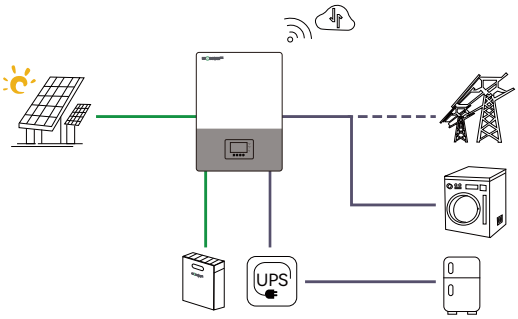

3. Installation

3.1 Packaging List & Storing

Packaging List

When the packaging is unpacked, the inner components should be the same as described in below packaging list.

Hybrid Inverter ×1	User Manual ×1	Expansion Screw and Tube ×4	1.3" CT ×1	Communication Port WaterProof Cover ×6
Wi-Fi dongle Optional ×1	Cross Head Screw ×17	Bracket: wall-mounted ×1	Battery communication cable Length 2m ×1 (Grey)	Parallel communication cable L=2m ×1 (Grey)

3.2 Location Selection and Installation

3.2.1 Requirements for installation location

a. The wall for mounting should be strong enough to bear the weight of inverter.

b. Please maintain the minimum clearances below for adequate heat dissipation.

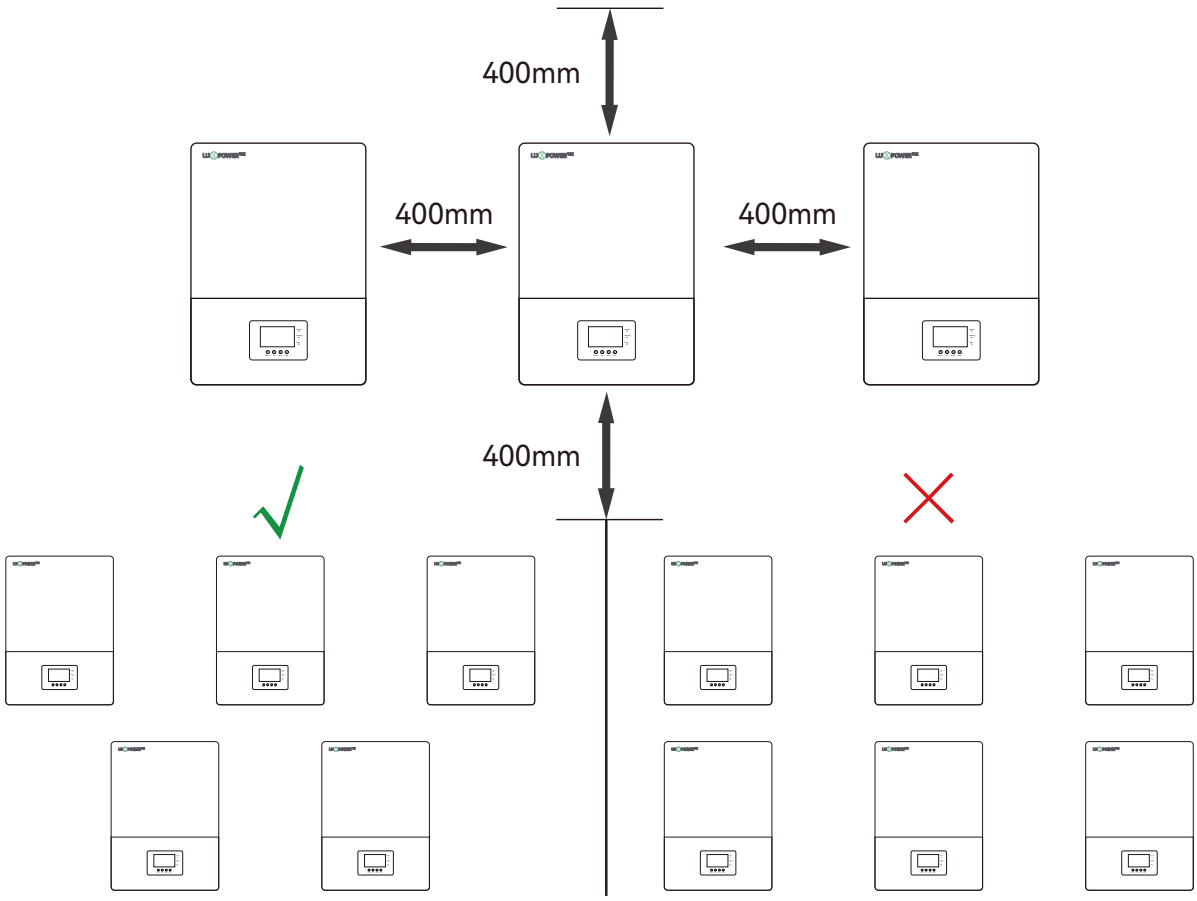

c. Never install the inverter in a place with direct sunlight, rain or snow. Please refer to below figure and select a well shaded place or install a shed to protect the inverter from direct sunlight, rain and snow etc. PROTECT the LCD screen from excessive UV exposure.

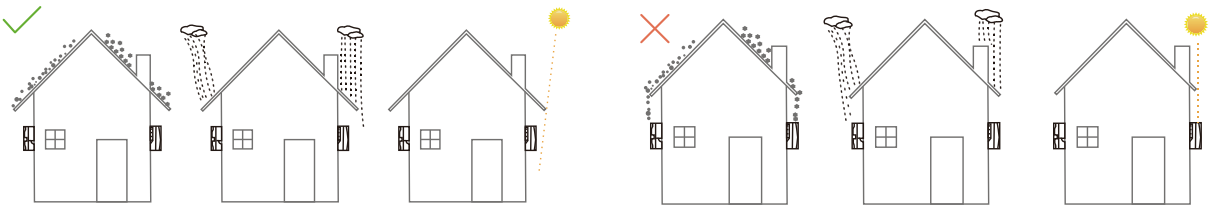

d. The inverter should be installed upright on a vertical surface.

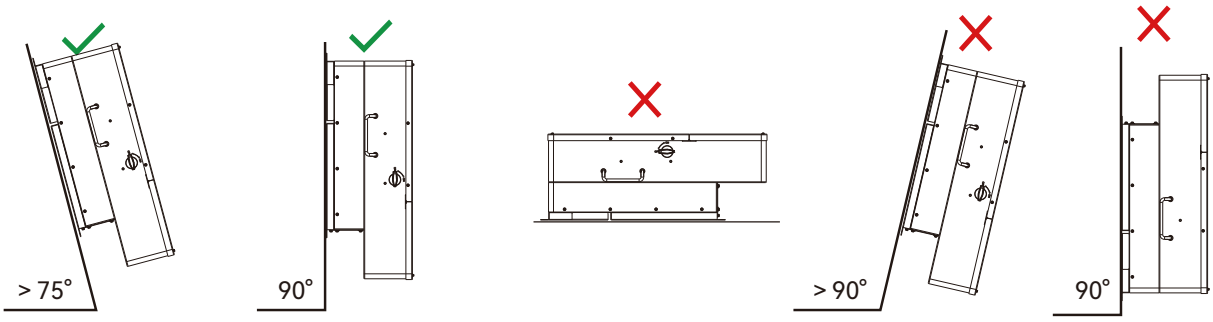

3.2.2 Installing the inverter

The inverter is wall-mounted type and, should be installed on a vertical, solid mounting surface, such as wood studs, brick or concrete wall. Two or more persons may be needed to install the inverter due to its weight. The slots on the mounting bracket can accommodate various stud spacings from 305mm to 406mm.

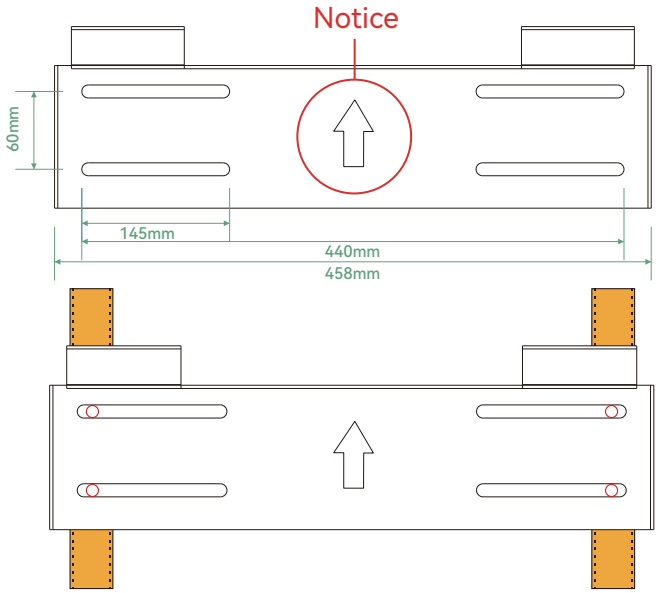

The mounting steps are as below: (Use brick wall as example)

Step 1. Mark the positions of drill holes with the mounting bracket, then drill 4 holes of 8mm (5/16inch) diameter and make sure the depth of the holes is deeper than 50mm(2inch).

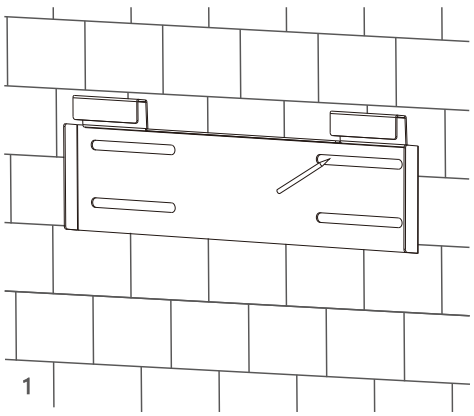

Step 2. Install and tighten the expansion bolts into the holes.Then use the corresponding nuts and washers (packaged together with the expansion bolts) to install and fix the wall-mounting bracket on the wall.

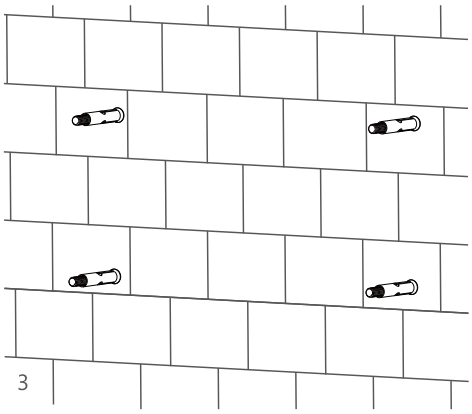

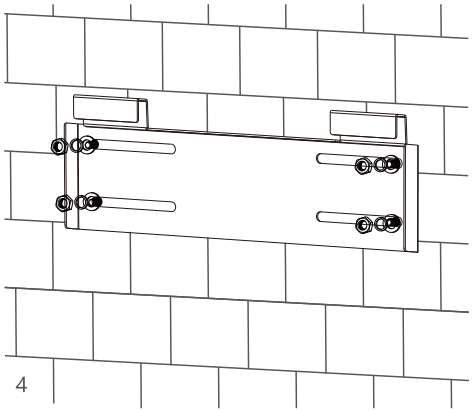

Step 3. Hang the inverter onto the wall-mounting bracket and lock the inverter on the wall using 2 self-tapping screws on the top of the inverter.

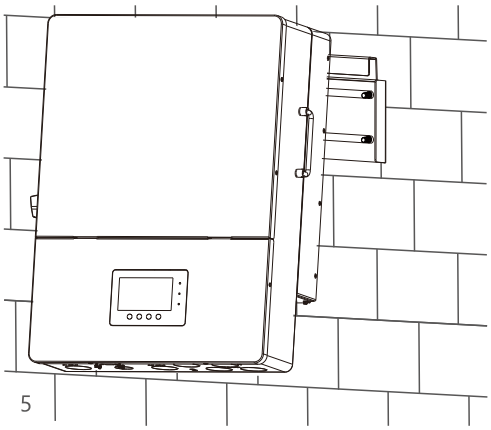

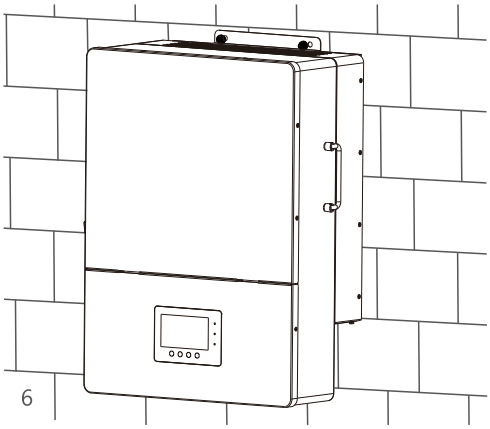

For installation on wood studs

Fasten the mounting bracket on the studs with 4 wood screws, then hang the inverter onto the bracket and lock the inverter on the wall with 2 self-tapping screws.

Please note that the wood screws and self-tapping screws are not provided with the inverter. Installers need to prepare the screws before installation.

3.3 Connection Overview

3.3.1 System Connection

The system connection diagram is as below.

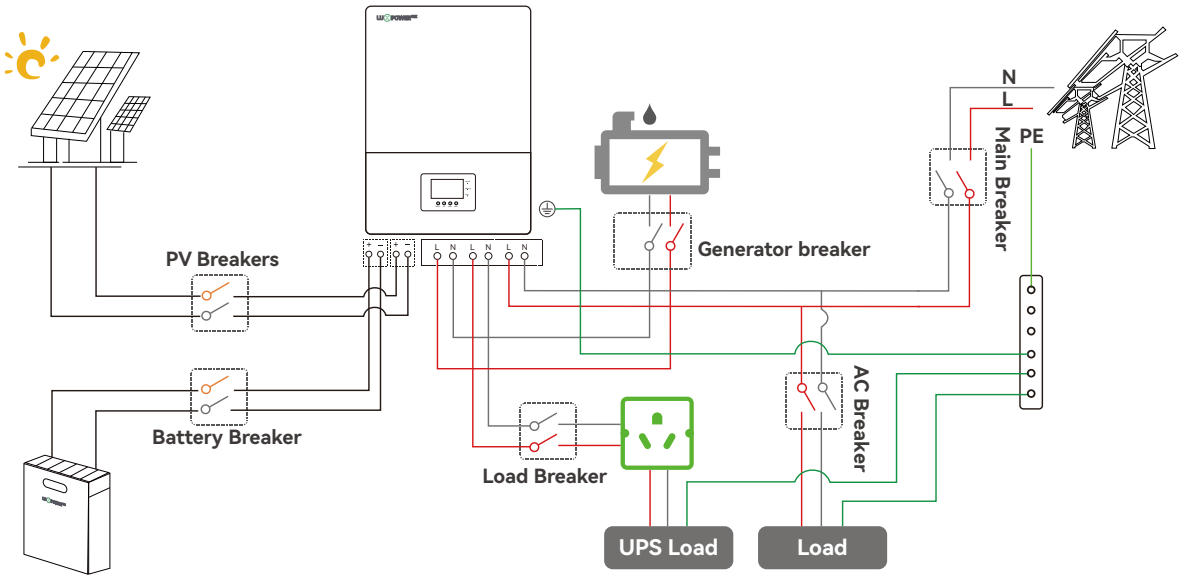

Please prepare the breakers before connetion, breakers selection recommendation for both DC and AC

Inverter model	12K
PV Breakers(2P×4)	MPPT1 string 1: 600V/20A MPPT1 string 2: 600V/20A MPPT2 : 600V/20A MPPT3 : 600V/20A
Battery Breaker(2P)	100V/300A
Main Breaker(2P)	200A/240Vac when ups is used for whole home backup 100A/240Vac when ups is used for partial load backup
Load Breaker(2P)	200A/240Vac when ups is used for whole home backup 100A/240Vac when ups is used for partial load backup
Generator Breaker	100A

Overview of Connection Ports

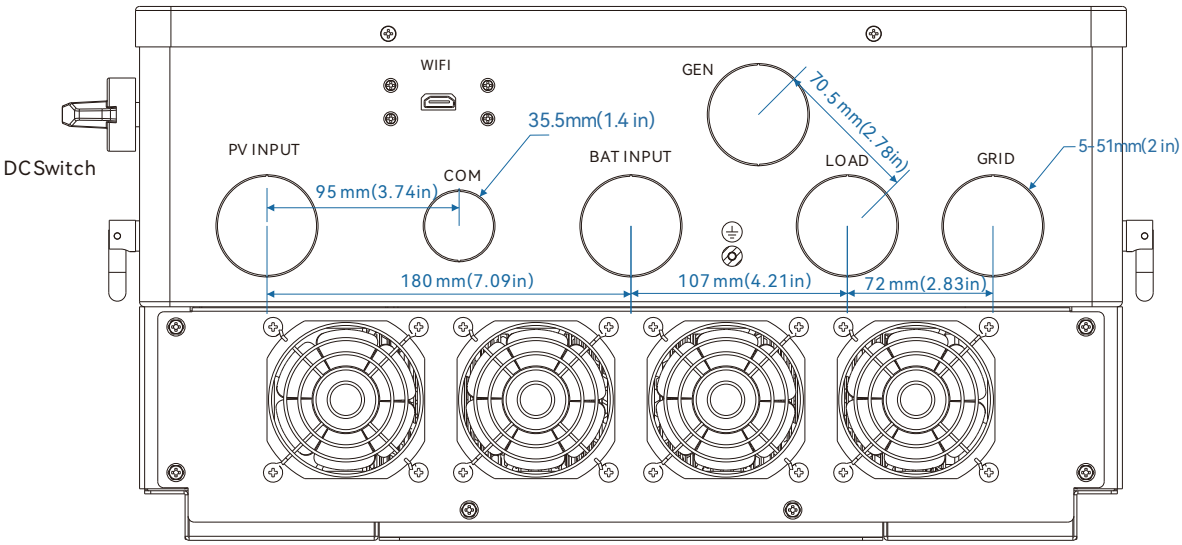

Overview of the cable box

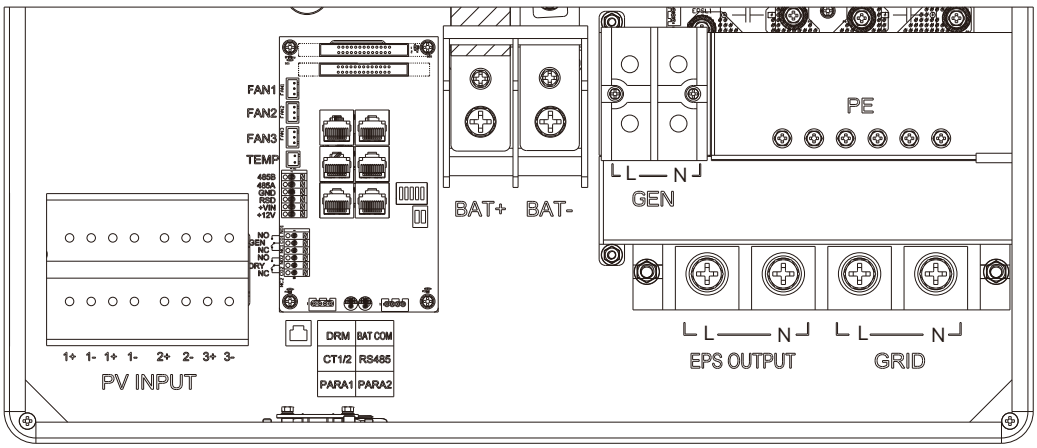

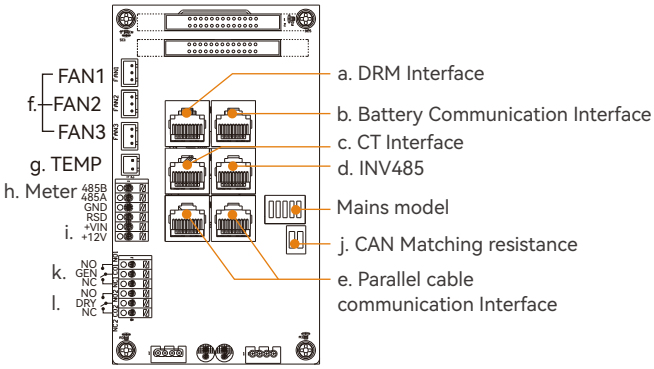

a). DRM port(Applied only in AU)
b). Battery communication port(CAN&RS485) please check Chapter 3.5.2 for Pin definition
c). CT Interface: please check Chapter 3.6.4 for CT connection
d). INV 485: Debugging port
e). Parallel communication port please check Chapter 3.9 for Parallel connection
f). FAN1/2/3
g). TEMP: Connection for temperature sensor of lead-acid battery
h). Meter 485B&485A: For Meter communication
i). VIN/+12V: Connect a outside emergency switch on these 2 terminals
j). CAN Matching resistance: Set DIP switch when use inverters in parallel
k). GEN(NO, NC): Connection for generator auto-start function
l). DRY(NO,NC): reserved

3.4 PV Connection

PV connection of this hybrid inverter is same as traditional on-grid solar inverter (string inverter).

⚠ WARNING

* Please double check the lowest ambient temperature of the installation location. The rated Voc on solar panel nameplate is obtained at 25℃As the ambient temperature drops, the Solar panel Voc increases. Please ensure the Maximum solar string voltage corrected at the lowest temperature does not exceed the inverter's maximum input voltage of 550V.

Cable Requirement:

Cable Size	Minimum Voltage
10-8 AWG(5-8 mm²)	600V

NOTICE

- The inverters has triple MPPTs. For MPPT1, users can connect two strings. For MPPT2 and MPPT3, users can connect one string.
- When users connect 2 strings to MPPT1, make sure the two strings has same quantity of solar panels. The inverter will limit the total MPPT1/MPPT2/MPPT3 input current to 25A/15A/15A automatically.
- The inverter will limit the max solar input power to 18kW totally.

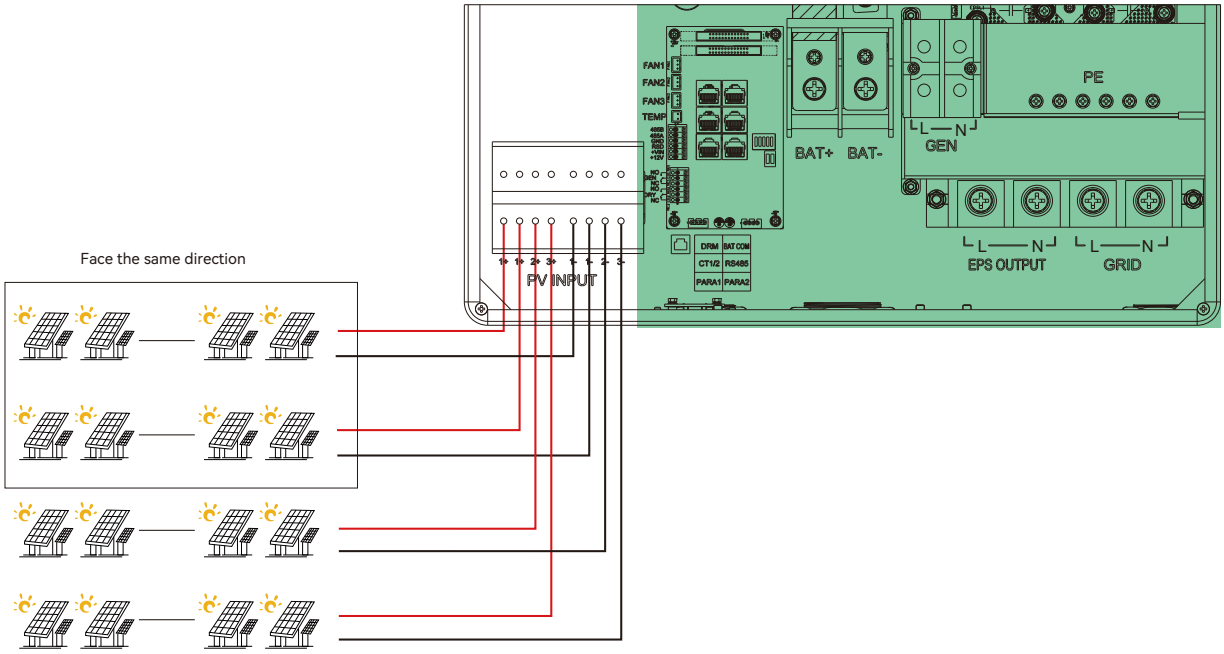

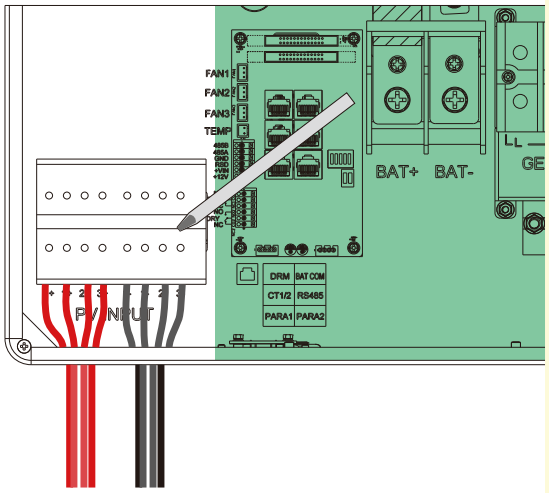

Steps for PV connection

a. Strip off 1/4-5/16inch(6~8mm) insulation on the PV string positive and negative conductors.

b. Use wire ferrules for PV string conductors if they are stranded wire type.

c. Insert the conduit fitting to the opening for PV connection and tighten it from inside using the counter nut.

d. Route the PV conductors through the conduit and conduit fitting into the inverter.

e. Secure the cable gland in place.

f. Ensure that the cables are connected correctly and securely. Then take appropriate measures to ensure that the conduit and conduit fittings are fastened reliably, and seal the cable entry holes.

3.5 Battery Connection

3.5.1 Battery power cable connection

Cable Requirement:

Model	Cable Size	Minimum Voltage	Torque for cable connection	OT ring
12K	3/0-4/0 AWG(85-100 mm²)	600V	20(N·m)	RNB100-10

Step 1. Strip 1/4-5/16inch(6-8mm) insulation from the cable end and crimp OT rings for the cable ends.

Step 2. Route the battery power cable through the cable gland, connect positive to BAT+, negative to BAT-.

Step 3. Secure the conduit fitting to the enclosure using the counter nut.

Step 4. Fasten the OT rings of battery positive and negative cables to the lugs according to the marking.

Step 5. Fix the cable gland in place.

⚠ WARNING

- Polarity reverse will damage the inverter!
- Install a DC isolator between battery and inverter can avoid potential damages caused by electric arc.

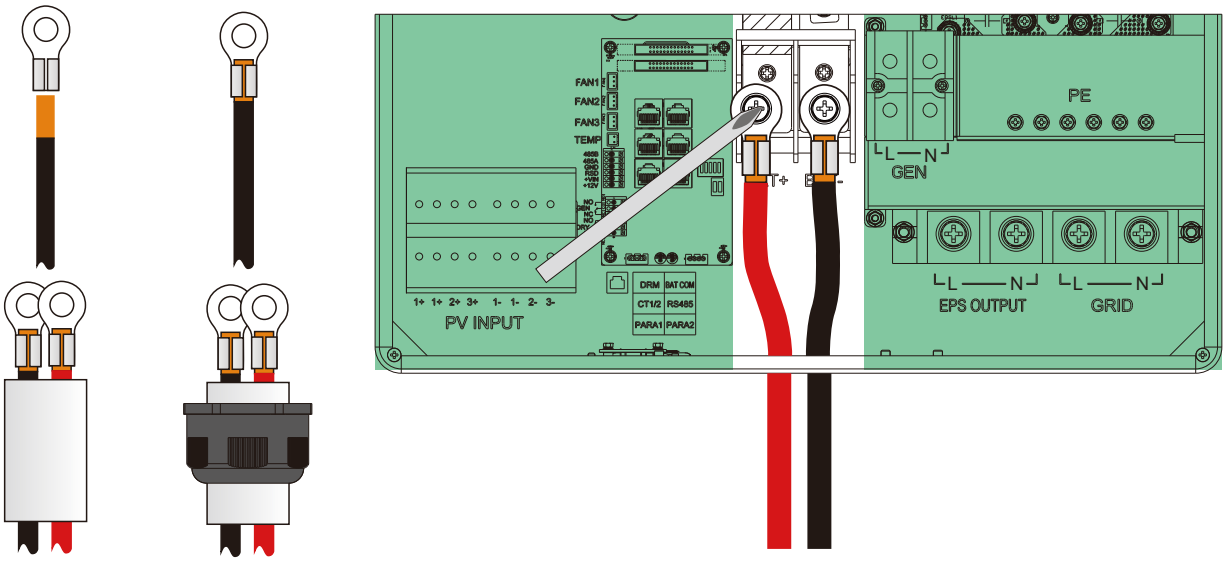

3.5.2 Battery communication cable connection

A correct battery communication cable must be used to connect the battery to the inverter when users choose lithium-ion battery type. Please select 'Lead-acid ' type if the lithium battery can not communicate with inverter. The battery communication port on inverter is a RJ45 socket, Pin for the RJ45 plug of the communication cable is as below. Make the communication cable according to the below inverter Pin and the correct pinout of communication port on battery. The inverter supports both CAN and RS485 communication.

Pin	Description
1	NC
2	GND
3	NC
4	BAT CAN H
5	BAT CAN L
6	NC
7	BAT RS485 A
8	BAT RS485 B

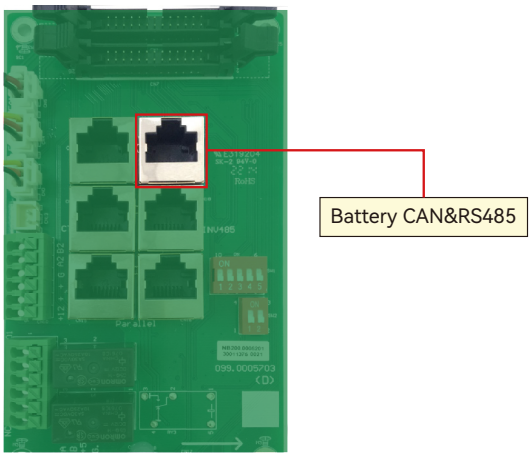

After battery power cable and communication cable connection, users need to enter Advanced setting and choose Battery type and brand on the inverter LCD.

NOTICE

For Li-ion battery

- Please make sure the lithium-ion battery to be used is compatible with Luxpower inverters. Please contact your distributor for updated battery compatible list.
- If you are using multiple battery modules with the inverter, the inverter communication cable must be connected to the master battery. Please check with your battery supplier for battery master and slave settings.

For Lead-acid battery

- The temperature sensor for lead-acid battery is optional. If you need it, please contact distributor for purchasing.
- There are three stages for lead-acid battery charging. For charging/discharge related parameters, please check charge/discharge setting page.

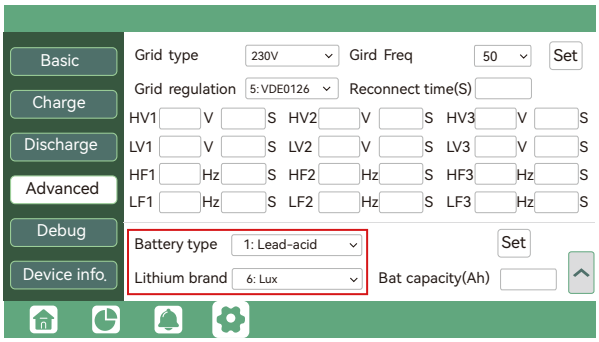

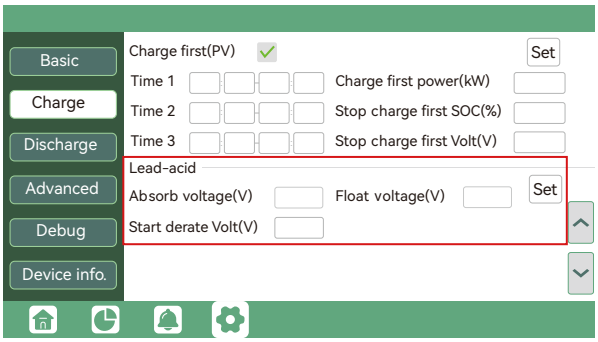

3.6 Grid&EPS load Connection

3.6.1 Grid type and regulation selection

The inverter has passed the main grid-connection regulations NRS097:

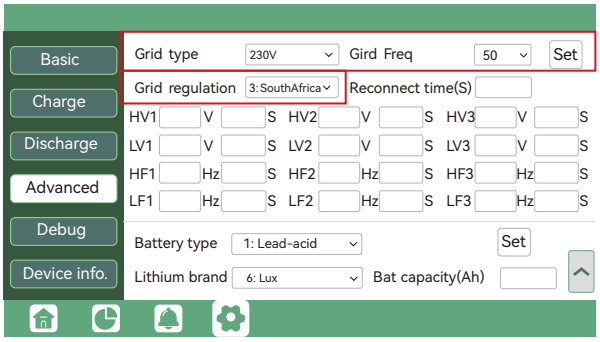

3.6.2 Grid and EPS load connection

The inverter can be connected to the load side of the service disconnecting means if the busbar rating in the main panel can meet the NEC705.12(B)(3) requirements. Otherwise, a Line side connection can be made to avoid an expensive main panel upgrade.

Grid and EPS Load Connection

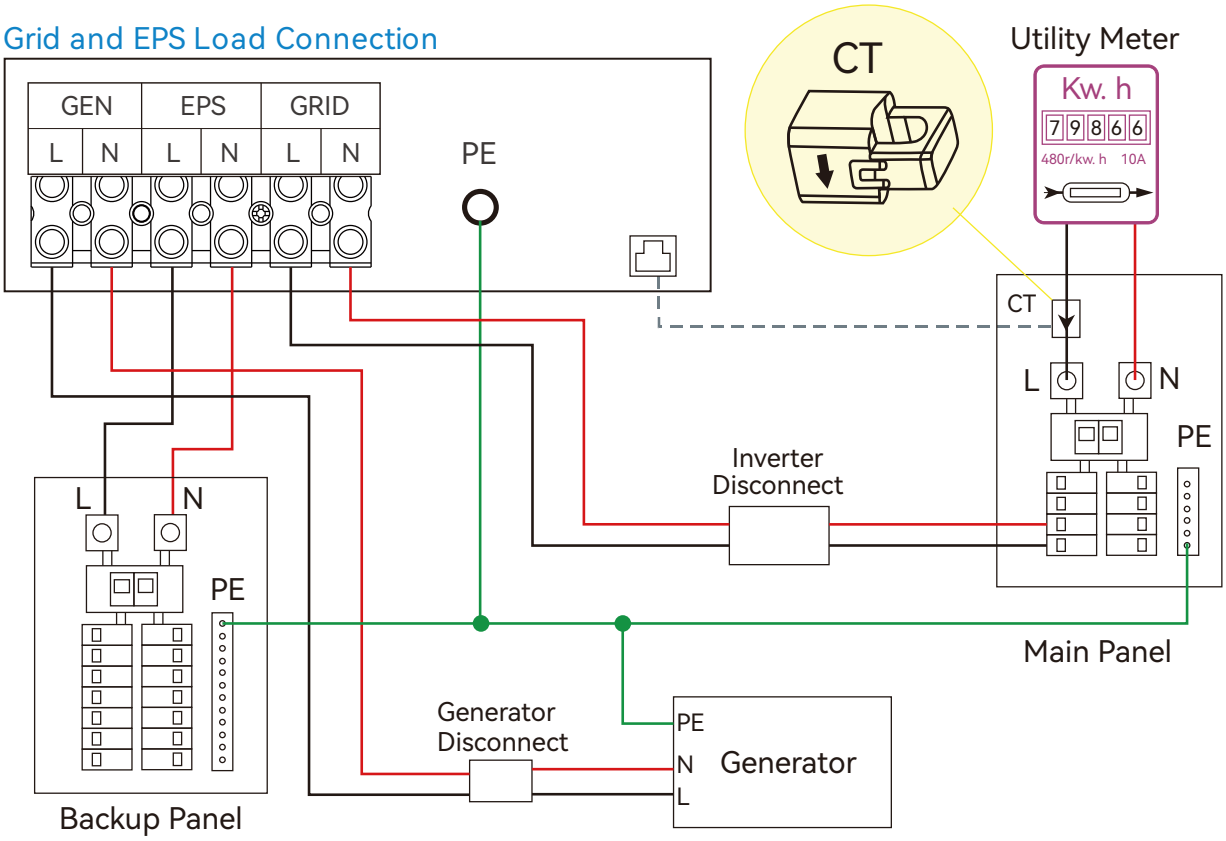

Whole Home Backup Connection

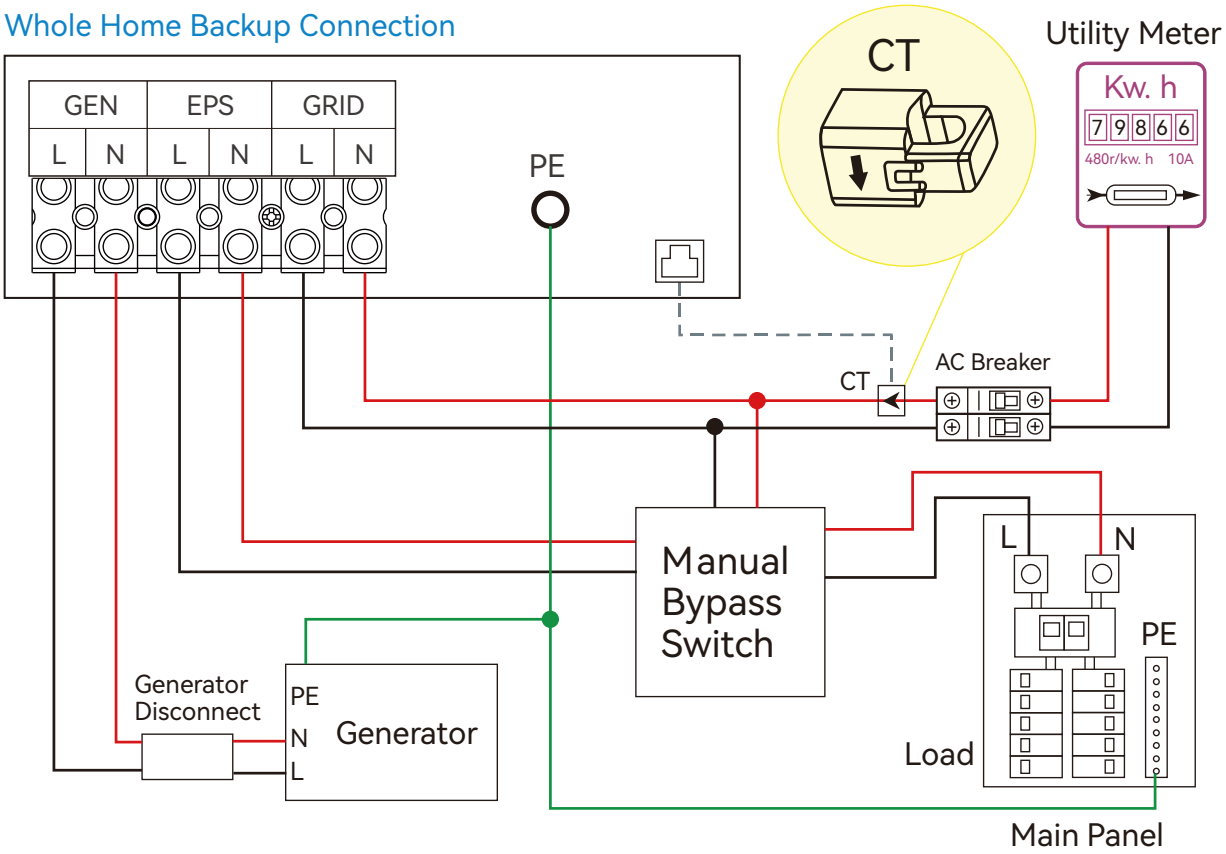

3.6.3 AC cable connection

Cable Requirement:

Current	Cross-section	Cable Diameter	Minimum Voltage	Torque for cable connection	OT ring
100A	3-2AWG(25-35mm²)	6-7mm	600V	41(N·m)	RNB38-10S
200A	2/0-3/0AWG(70-85mm²)	9-10mm	600V	41(N·m)	RNB100-10

a. Strip off 5/16-3/8inch (8~10mm) insulation sleeve on the cables.
b. Use wire ferrules if the cables are made of fine stranded wires.
c. Secure the conduit fitting to the enclosure using the counter nut of the fitting.
d. Fasten the grid and EPS load cables to the terminal block in accordance with the markings.
e. Secure conduit to the conduit fitting.
f. Check that the cables are connected correctly and securely, then take appropriate measures to ensure that the conduit and conduit fitting are secured reliably, and seal the cable entry holes.

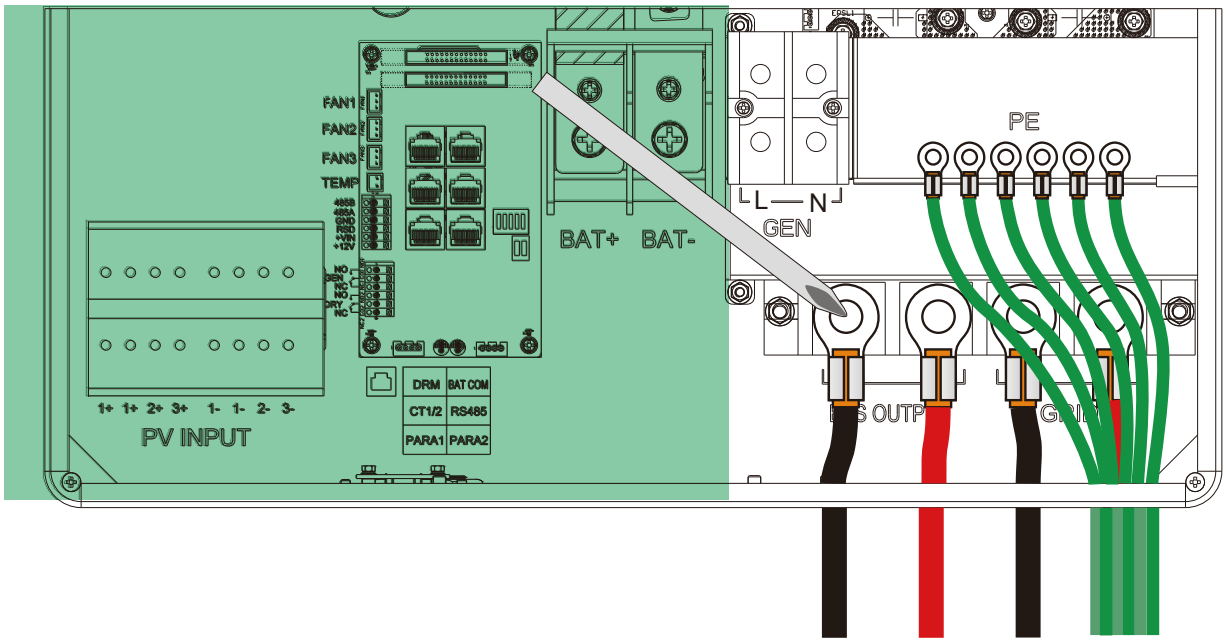

3.6.4 CT/Meter Connection

To measure the power import from and export to the grid, a pair of CTs or one triphase meter must be installed at the service entry point in or near the main service panel. We standard supply 1 CT for one inverter.

CT Port Pin definition

The CT interface for 1 CT connection is a RJ45 port, we have made a RJ45 plug on those 1 CT in advance, so you can connect it to port directly.

Pin	Description
1-4	Reserved
5	Reserved
6	Reserved
7	CT1N
8	CT1P

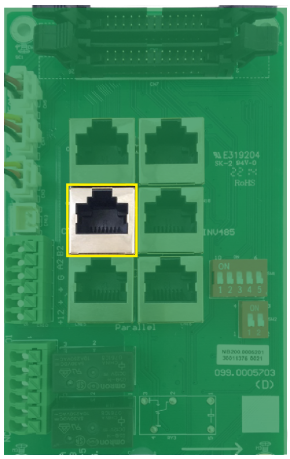

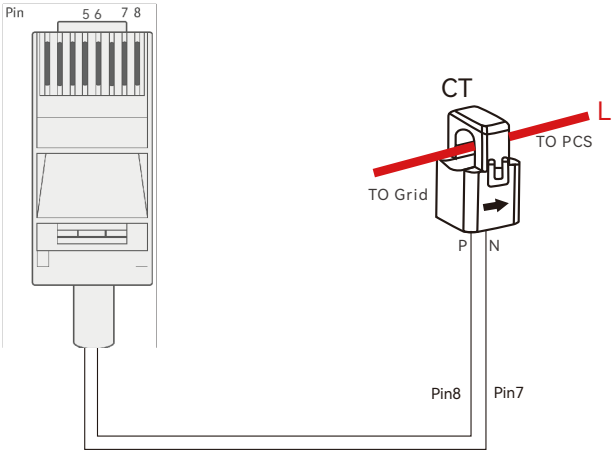

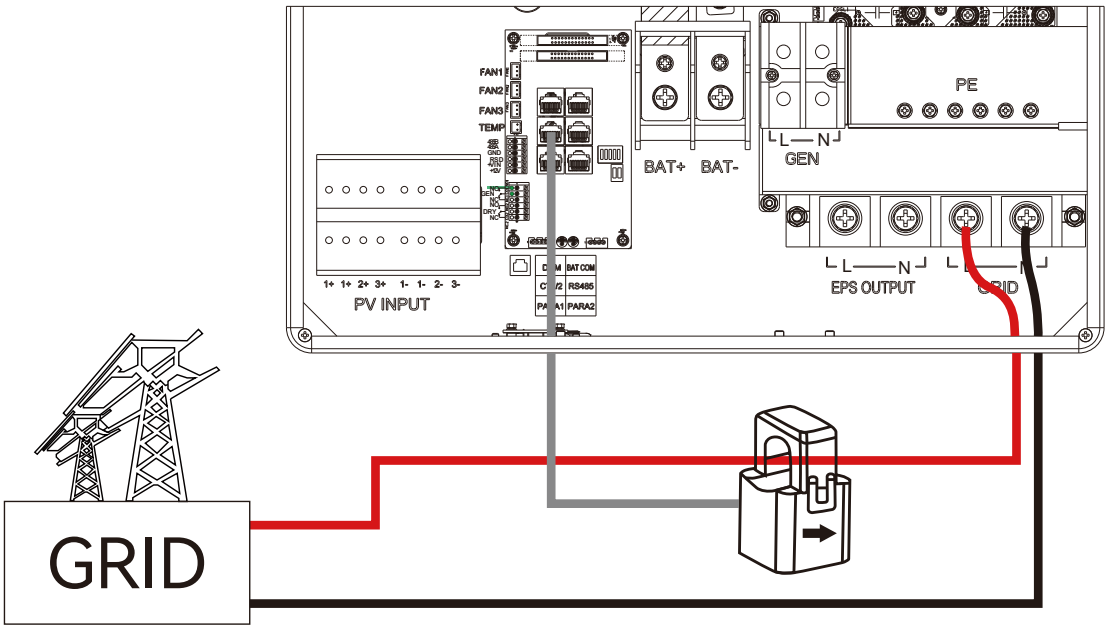

Please refer to the above connection diagram for the correct positions of CTs. The arrows on the CTs must point to inverter side.

CT Clamp Ratio

The Luxpower inverters support two ratios of CT clamp-1000:1, 2000:1 and 3000:1. The CT ratio of the CTs in the accessory bag is 1000:1. If you are using a 3rd party CT, please ensure the CT ratio is either 1000:1, 2000:1 or 3000:1, and then select the correct CT ratio setting in the inverter monitor page or on inverter LCD.

Extend CT clamp cable

The CT wires can be extended with a common ethernet cable if the length is not enough. A RJ45 adapter is needed for the extending. The CT wires can be extended up to 300ft(around 100m).

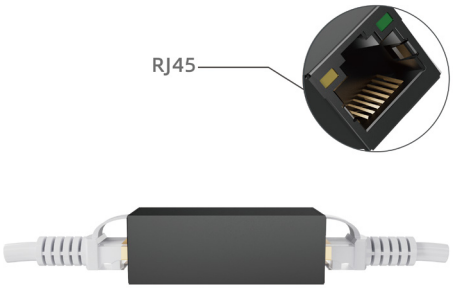

Meter Connection

Currently only EASTRON SDM630-Modbus meters can be used. If you need to use meter for import /export detection instead of CTs, you need to connect it to the Meter 485A and 485B terminals on the inverter, please contact Luxpowertek for detailed guideline.

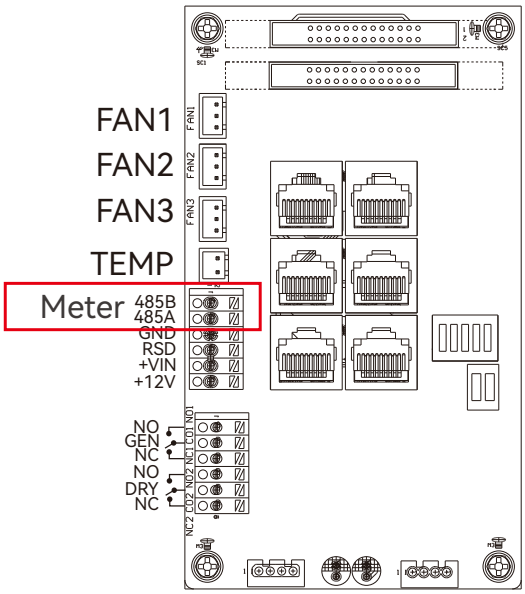

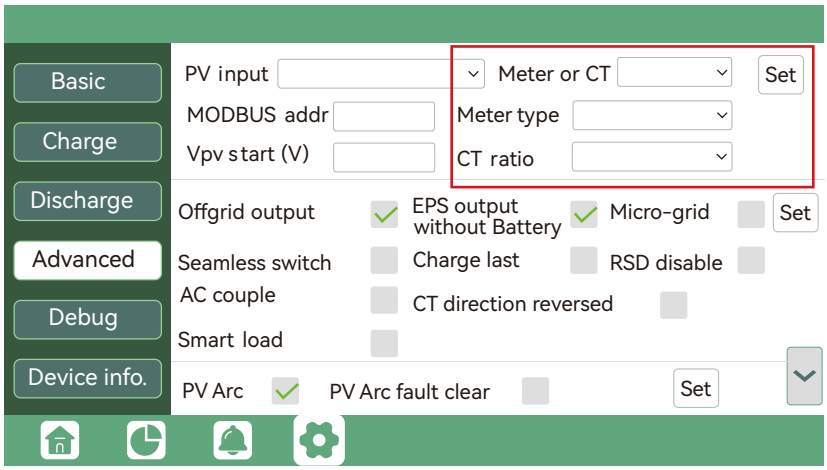

3.7 Working with Generator

3.7.1 Generator system connection

This hybrid inverter can work with generator. There are Gen ports on the inverter for generator connection.

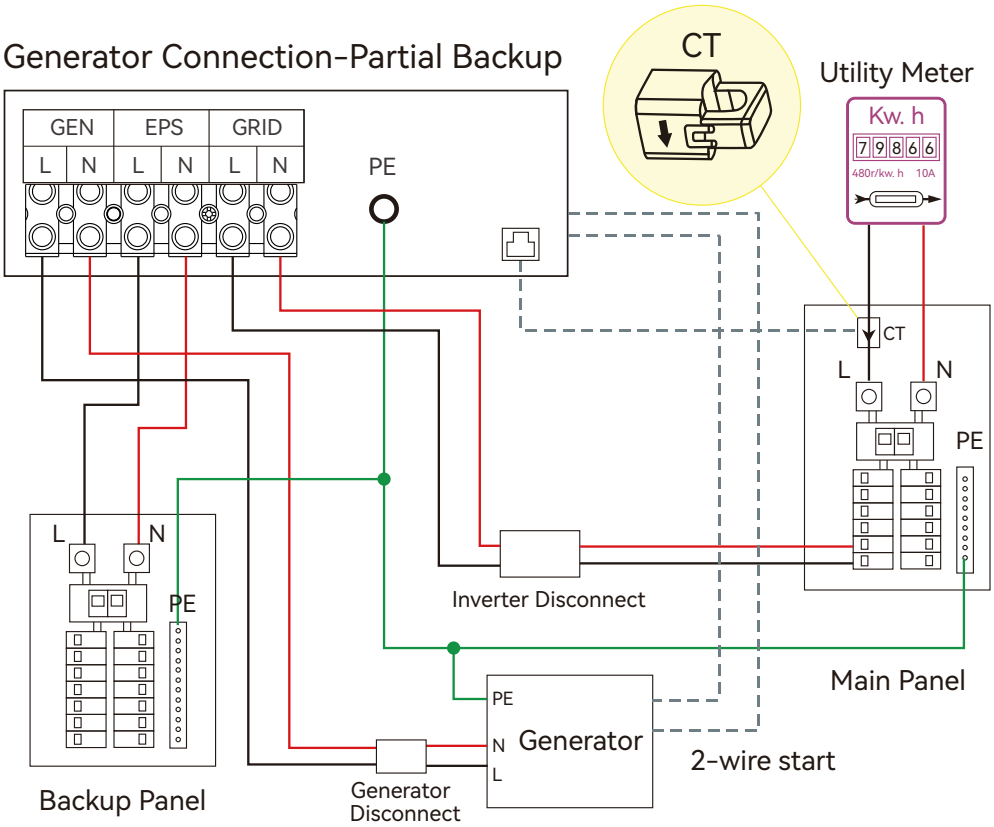

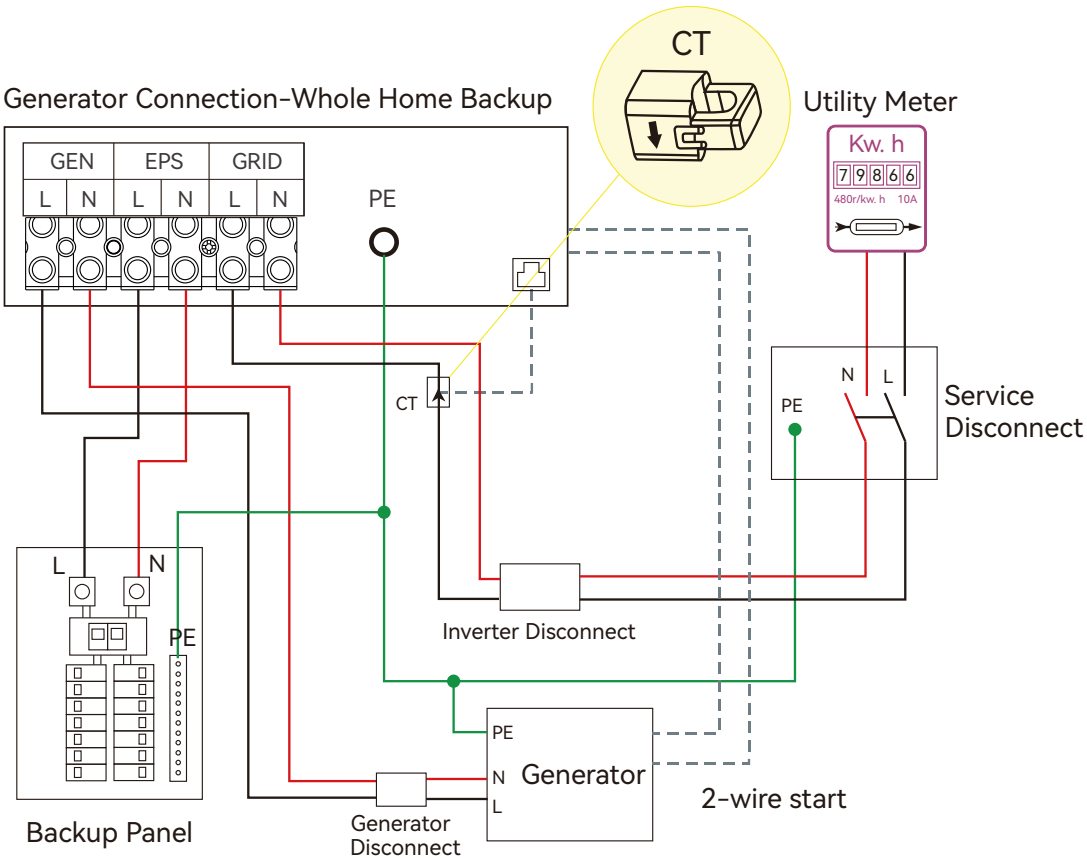

When generator is started, all the loads connected to EPS will be supplied by the generator. Meanwhile battery will be charged.

The pass-through relay on the generator port is 90A. When generator is on, please ensure the total load and charge current will not exceed 90A.

The generator start signal shall connect to COM board GEN(NO, NC port) if users want to start generator remotely.

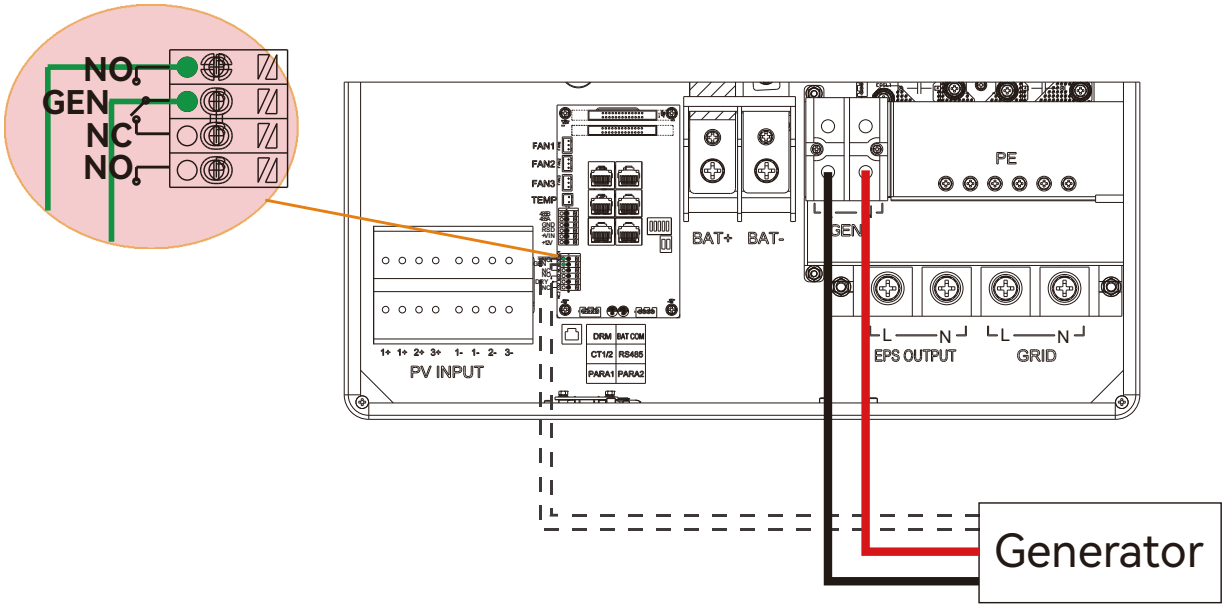

3.7.2 Generator Startup and Stop settings

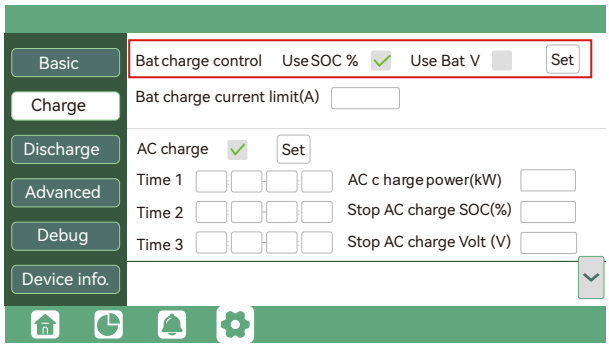

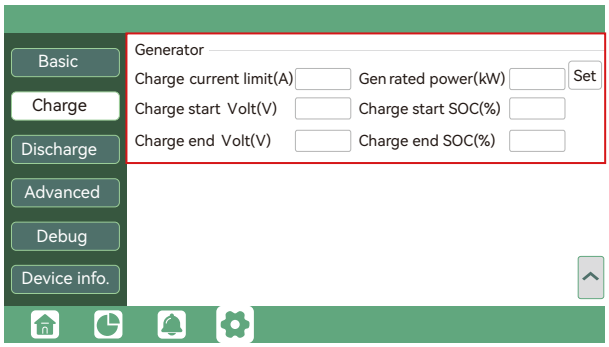

Depends on the Bat charge control setting, system will use either battery SOC or battery voltage to judge if system need to start or stop the generator.

Generator Start Conditions

When utility fails and

- When battery is discharged to cut-off settings

or there is force charge request from battery.

or when the battery voltage or SOC is lower than the Generator Charge start Volt/SOC settings.

Generator Stop Conditions

When battery voltage or SOC is higher than Charge end Volt/SOC settings value.

3.8 AC Coupling Installation Connection

The inverter supports AC coupling connection with the existing grid-interactive solar system. The existing solar system is connected to the inverter's GEN port.

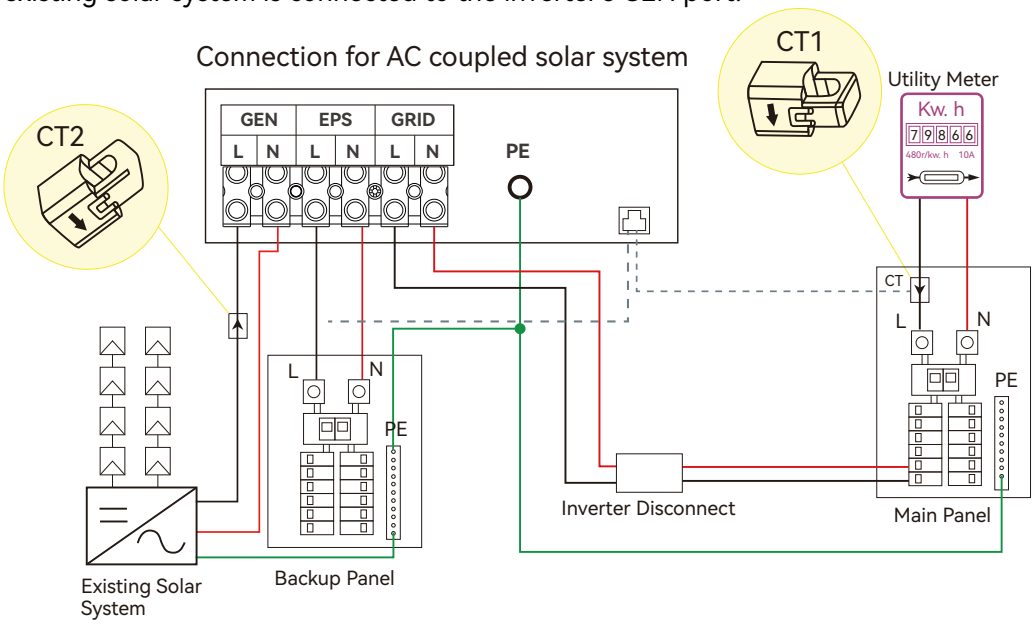

After AC couple function enabled:

When the Grid is on, the hybrid inverter bypasses the interactive inverter AC to the grid and EPS. If On-Grid and Export to Grid are enabled, the AC-coupled inverter will always remain on and feed excess power back to the grid (ensure you are permitted by your utility provider). If Export to Grid is disabled, the AC-coupled inverter will stay off and cannot operate in on-grid mode to sell power.

When grid is off, The GEN terminal is connected to the EPS terminal inside the inverter. In this case, the loads will be first supplied by solar power. If solar panels are generating more power than load consumption, the excess solar power will be stored to the battery. When solar power exceeds the sum of load power and max battery charging power, e.g. when battery is nearly full. The inverter will signal the grid interactive inverter to reduce power via the frequency shifting power reduction mechanism, thus to maintain the balance of generation and consumption of the micro grid system.

AC Coupling Settings

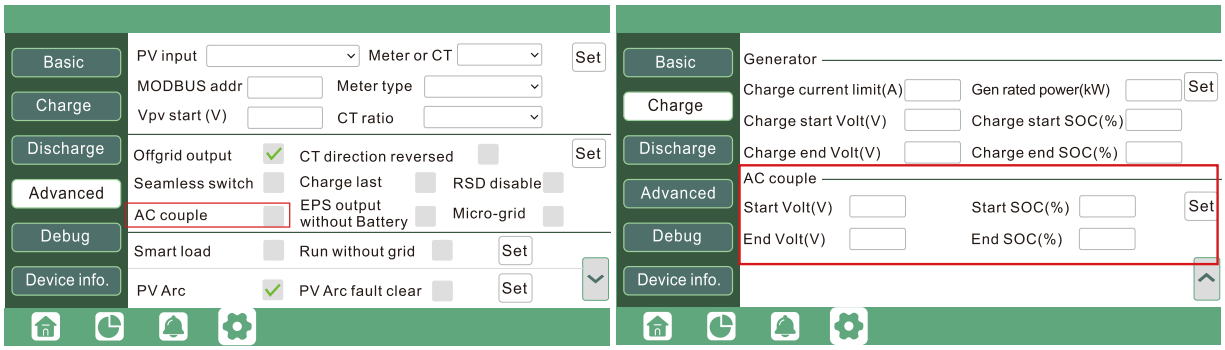

Users need to enable AC coupling function when they connect existing on grid system to GEN terminal.

Start SOC(%): The SOC at which the AC coupled inverters are turned on when in off-grid mode. 50%~70% recommended

End SOC(%): The SOC at which the AC coupled inverters are shut down when in off-grid mode. 90% recommended.

3.9 Parallel System Connection

3.9.1 Connection for paralleling system

The hybrid inverter supports parallel connection to expand power and energy capacity to suit different using scenarios. Up to 10 units can be paralleled to reach a capacity of 120kW. Wiring diagram is as below, the manual bypass switch connect loads to EPS panel for default. When inverters fail, users can switch the loads to utility.

Single Phase parallel system

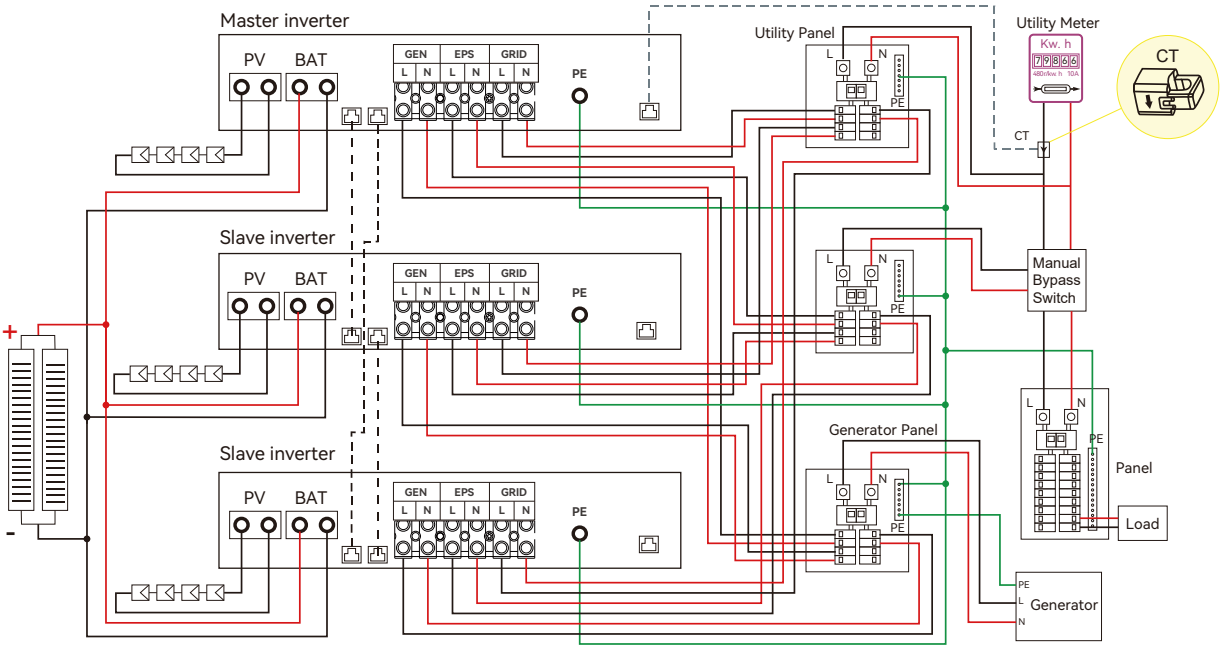

Please put the 2-bit CAN balancing resistor switch to ON status for the first and end inverter of the daisy chain loop.

Inv1 setting

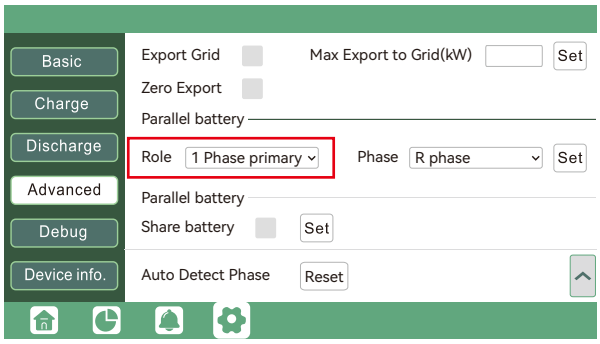

Inv2 setting

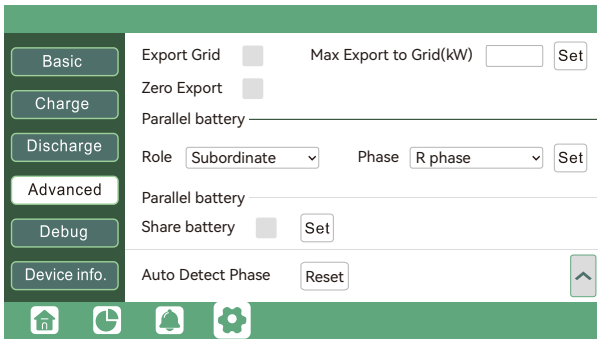

Inv3 setting

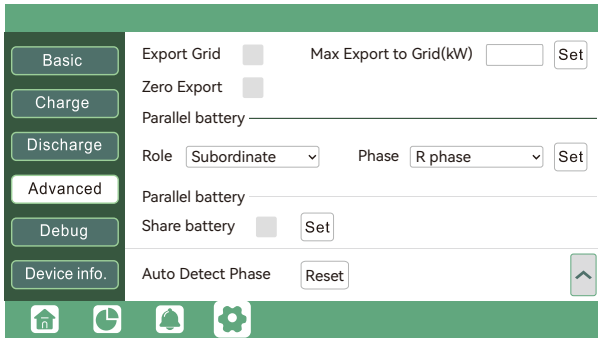

Three Phase parallel system

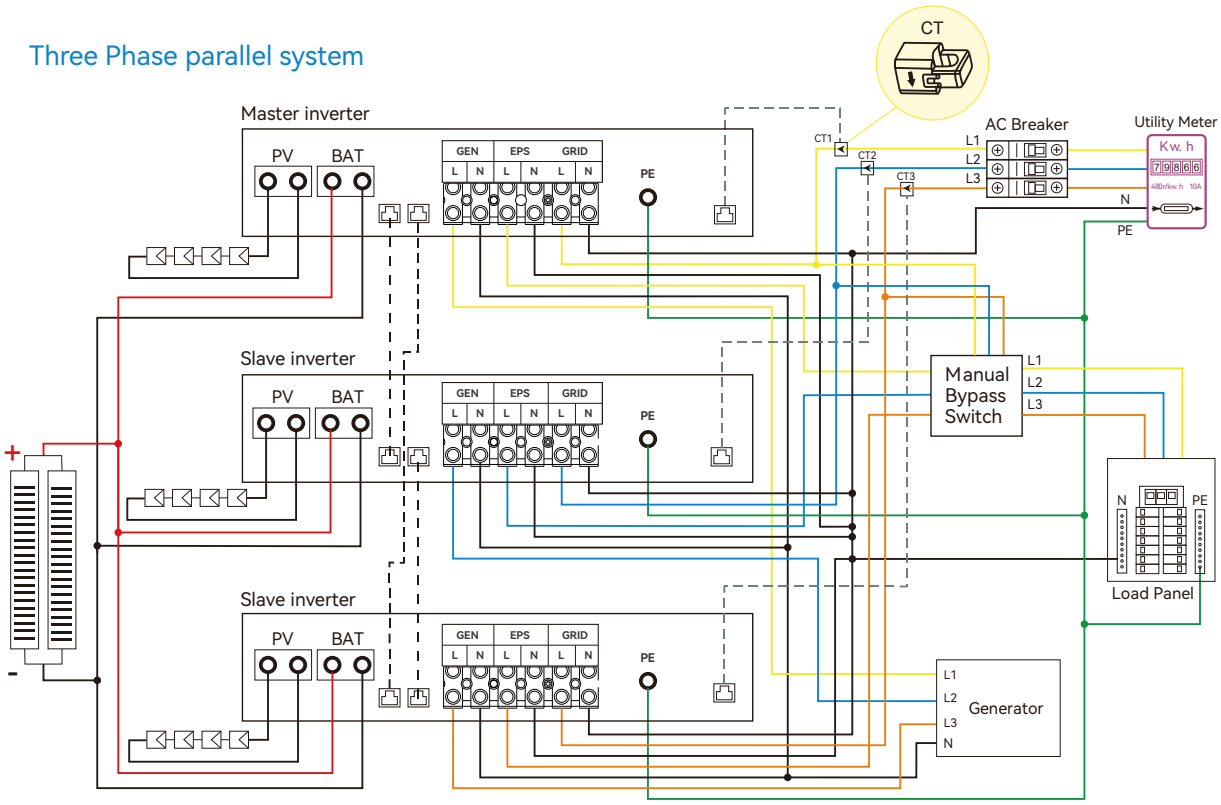

Inv1 setting

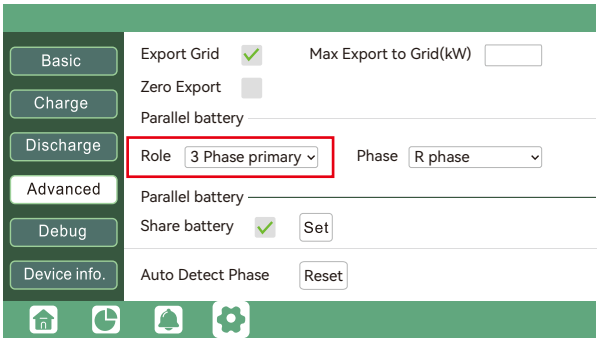

Inv2 setting

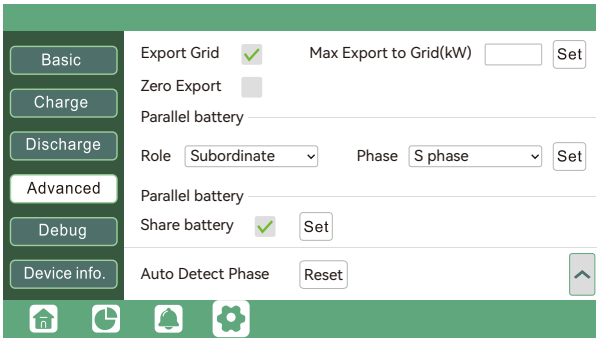

Inv3 setting

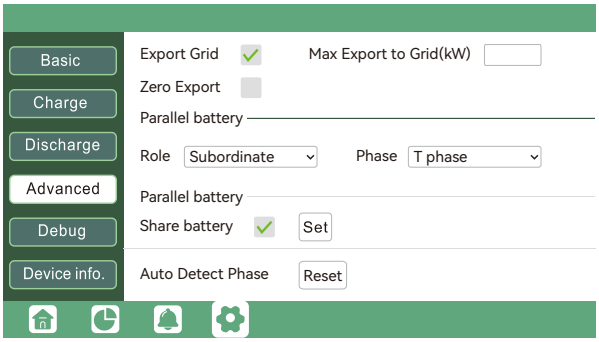

Please put the CAN communication PIN to on status for the first and the end inverter.

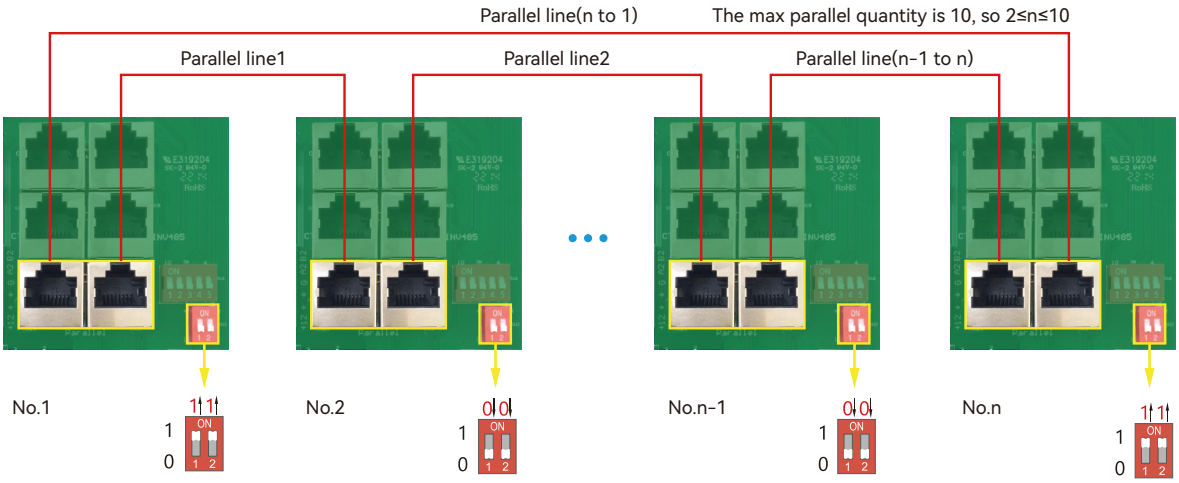

If the parallel cable is not enough or long enough, please make a straight pin to pin cable.

Setting for paralleling function in monitor system

1. Set up monitoring for the system, add all dongles into one station. Users can login to visit the monitor system, Configuration->Station->Station Management->Add dongle to add dongles.

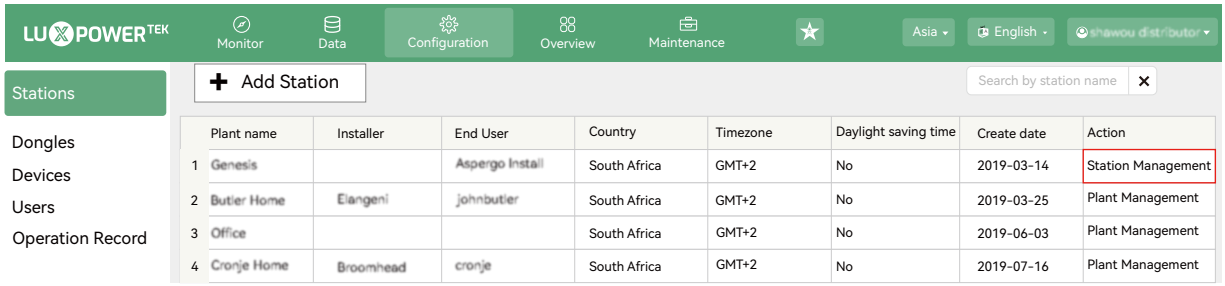

2. Enable share battery for the system if the system share one battery bank, otherwise disable the shared battery function.

3. Set the system as a parallel group in the monitor system.

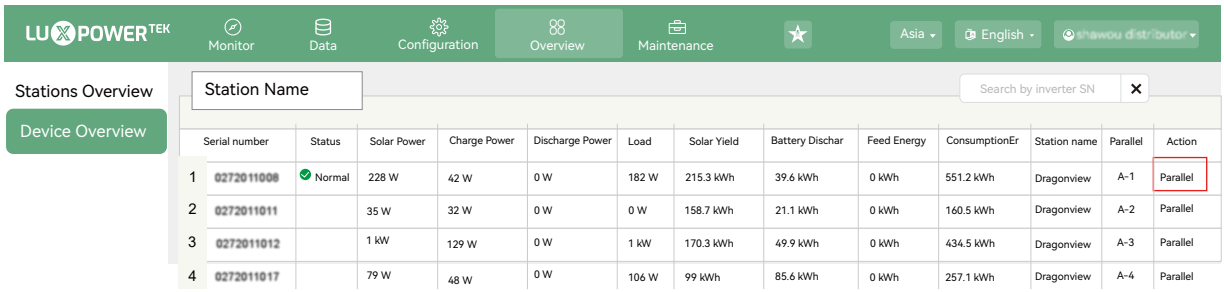

Please contact your inverter supplier for more detailed guidance for paralleling system.

3.9.2 Parallel information display

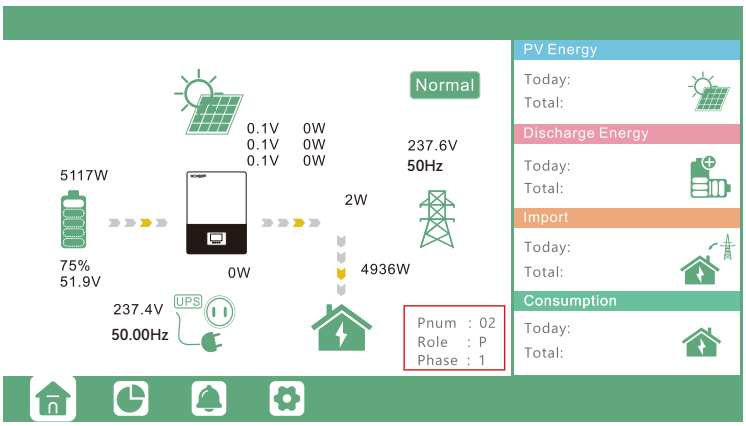

The information in the red box shows the parallel information.

Pnum: 01~10, display number of parallel units

Role: P or S, P means Primary and S means Subordinate

Phaes: 1~3, 1: R Phase, 2: S Phase, 3: T Phase

NOTICE

Notices for parallel system:

- Ensure the Generator is connected to all systems in parallel (if application).
- If you cannot divide the number of PV panels connected to each inverter, it is recommended to have more PV panels in the primary inverter.
- The values shown on the LCD of each inverter represent the inverter's contribution, not the system's total.

3.10 Monitor System Setup

3.10.1 WiFi/GPRS/4G/WLAN dongle connection

Users can use a WiFi/ WLAN /4G /2G dongle to monitor their inverter, and view the monitoring data on computer or smart phone remotely.

To view data on smart phone, please download the LuxPowerView APP from Google Play or Apple APP store, then login with their user account.

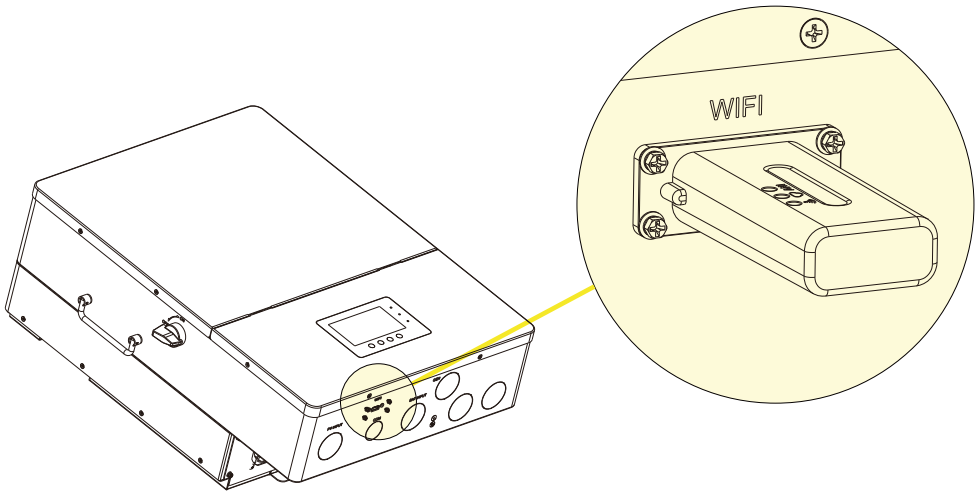

3.10.2 Setup the monitor system

1. Sign up an account on the mobile phone APP or Website

The “customer code” is a code we assign to your distributor or installer. You can contact your supplier for their code.

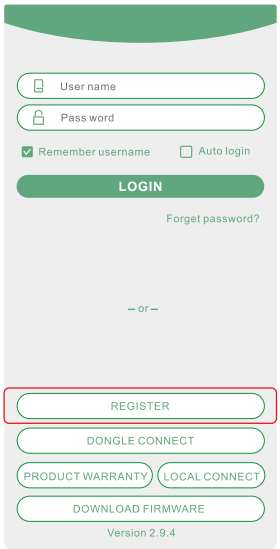

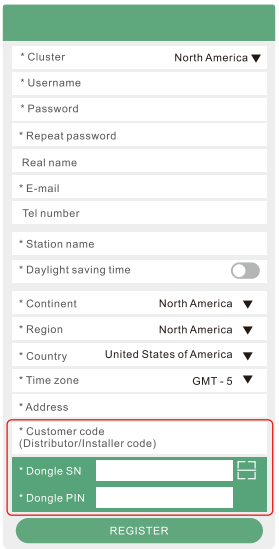

2. The station and wifi dongle will be created auto when you register, if you want have more stations need to be created, you can create as below

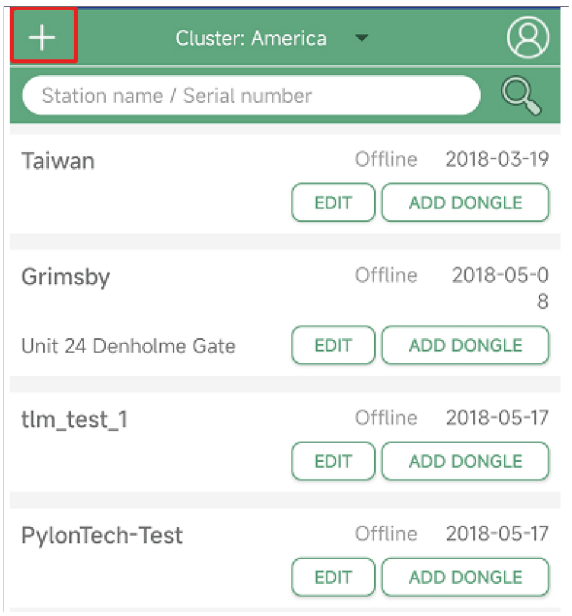

3.10.3 Set homewifi password to dongle

1. Connect your mobile phone to the “BAxxxxxxxx” wireless network where “BAxxxxxxxx” is the serial number of the WiFi dongle.
2. Click the “WiFi MODULE CONNECT” button on the APP.
3. Select the home WiFi that the WiFi dongle is to be connected to, enter the WiFi’s password. And then click “HomeWifi Connect”. The WiFi dongle will restart and try to connect to our server automatically.
4. Check the LEDs’ status on the WiFi dongle. The middle light should be solid lit when the WiFi dongle connects to our server successfully.

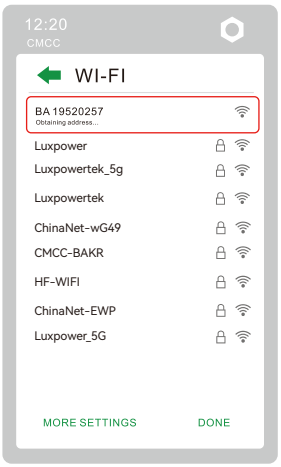

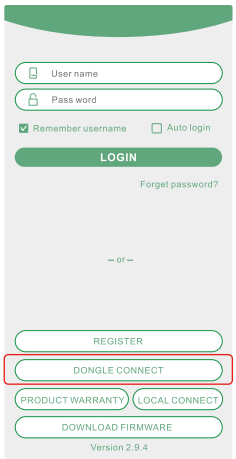

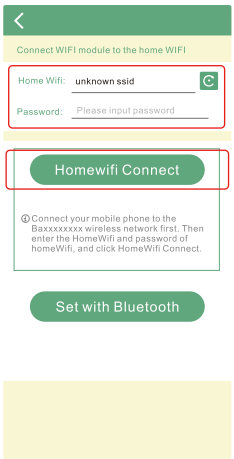

5. Now you can disconnect your mobile phone from the "BAxxxxxxxx" wireless network. Login on the APP with your account, you’ll find the inverter information already appears. Now you’ll be able to monitor and control the inverter remotely on any smart phone or computer that has Internet connection.

Please download the following guides for setting up WiFi dongle and monitoring account at

Document Reference:

1. Wifi Quick Guidance

Quick guidance for setting connection of WiFi module to home WiFi, you can also find a printed version in the packaging of the WiFi module.

2. Monitor system setup for Distributors and Monitor system setup for endusers

Account registration, the description of each items and parameters, setting parameters

3.Lux_Monitor_UI_Introduction

Introduction of monitor interface

3.10.4 Third party RS485 communication

Meter 485B&485A: when the Meter is not connected. These two pin can be used to communicate with inverter using our RS485 modbus protocol.

INV485: This interface is shared with the WiFi module. If WiFi module is not in use, users can use this interface to communicate with inverter.

Please contact your distributor to get the protocol for third party APP development.

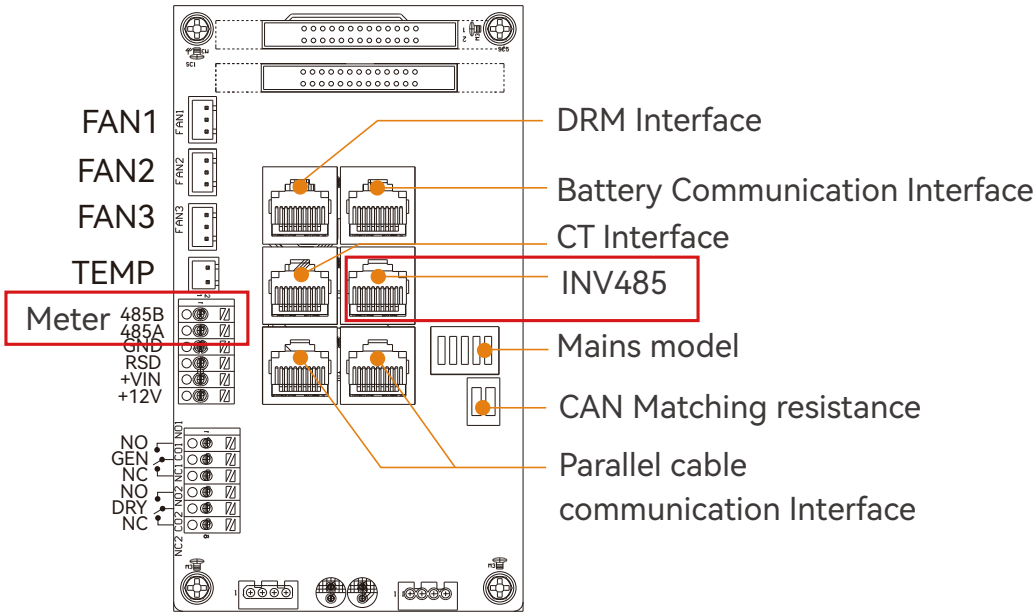

Pin	Description
1	485B
2	485A
3-8	/

4. Operation Guide

4.1 Operation Mode and Function

The inverter has different working mode to meet customers' various demands, the working modes are as below.

4.1.1 Self-usage Mode(Default)

In this mode, the priority order of load supply source is Solar>Battery> Grid. The priority order of solar power usage is Load> Battery> Grid.

- **Application Scenarios**
  Self consumption mode will increase the self consumption rate of solar power and reduce the energy bill significantly.
- **Related Settings**
  Effective when Charge Priority, AC Charge, and Forced discharge are disabled.
- **Example**

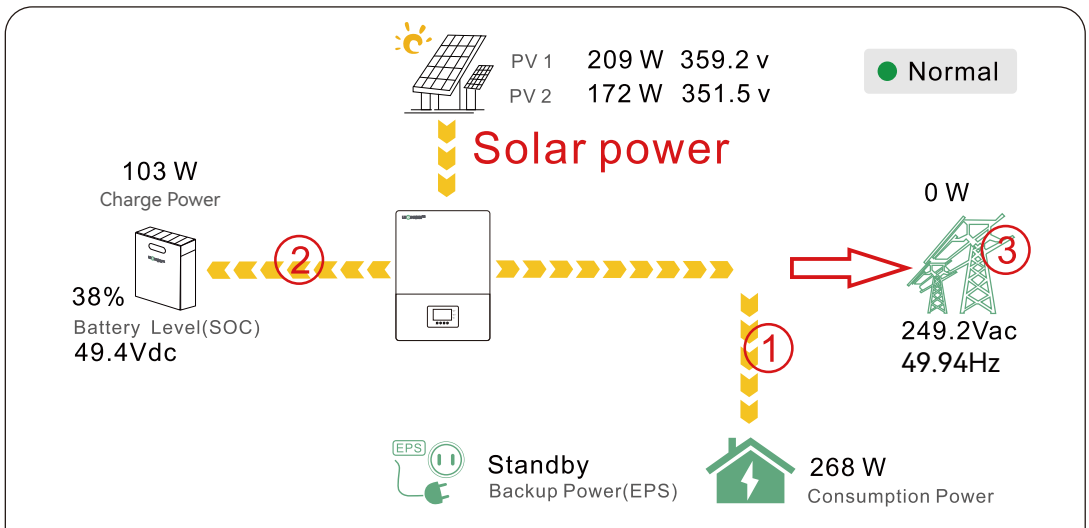

When solar power is enough, solar power will take load, then charge the battery, and at last feedback into the grid (when feedback function is enabled).

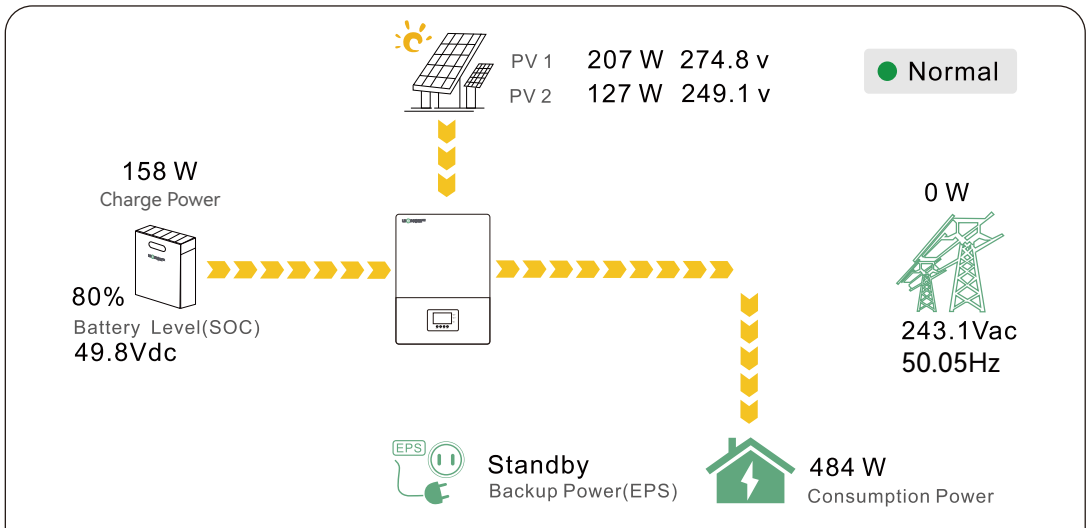

When solar is not enough to take load, the solar and battery will take load together. If the battery is empty, grid will used to take load.

4.1.2 Charge First Mode

The priority order of solar power usage will be Battery > Load > Grid. During the Charge Priority time period, load is first supplied with grid power. If there is excess solar power after battery charging, the excess solar power will take load together with grid power.

- **Application Scenarios**
  When users want to use solar power to charge battery, grid power to supply load.
- **Related Settings**

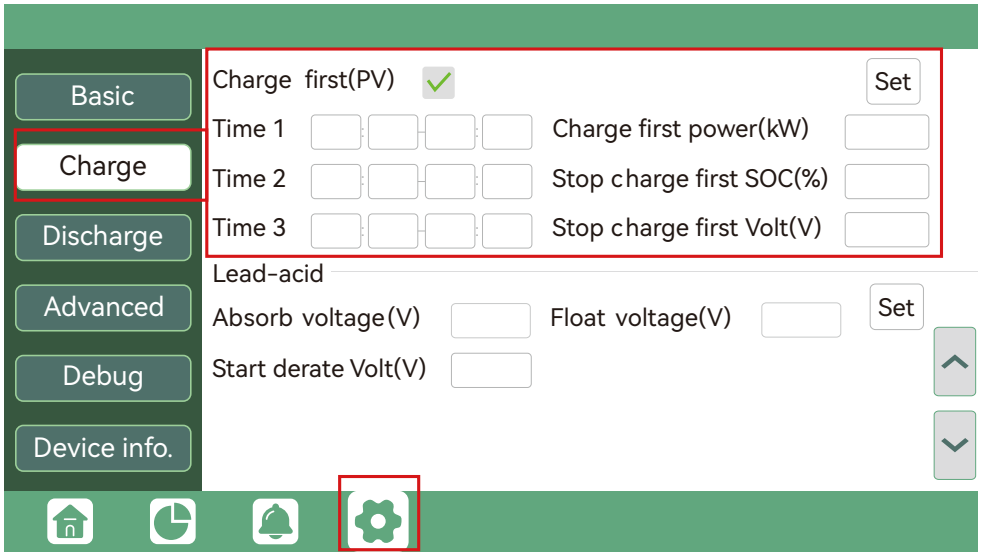

- **Example**

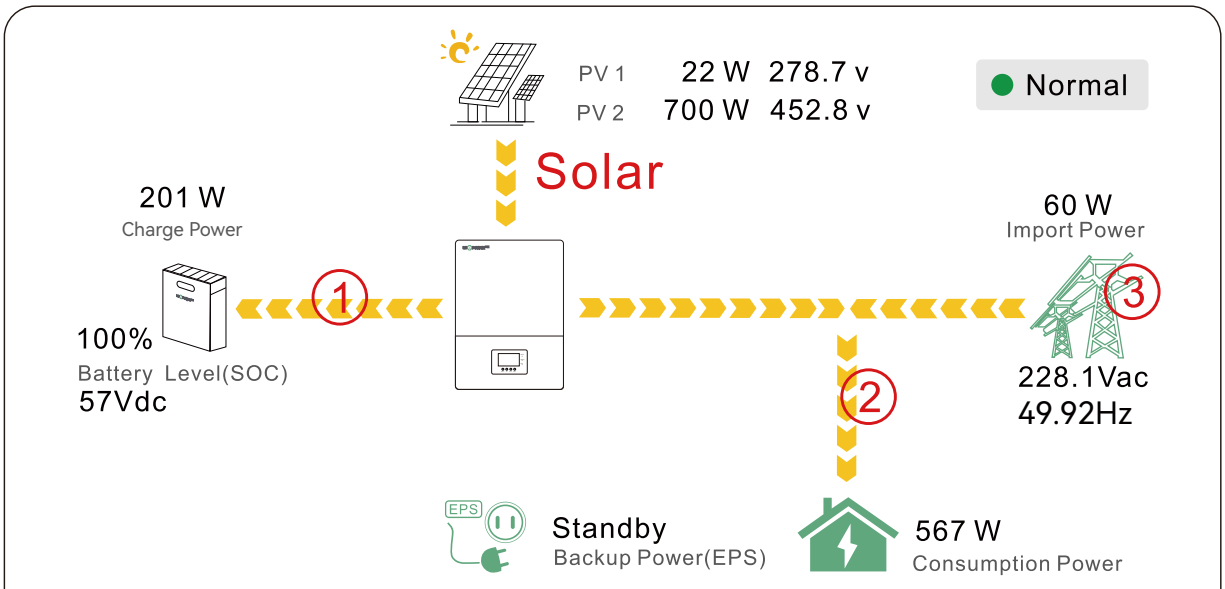

Solar power will used to charge the battery first, if there is extra power, it will be used to take load.

4.1.3 AC Charge Mode

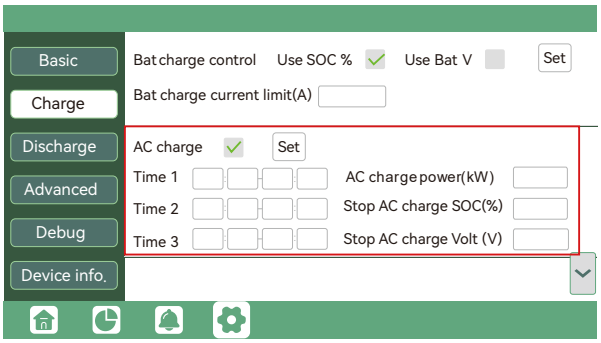

Users can charge battery with grid power when electricity price is cheap, and discharge battery power to supply load or export to the grid when electricity price is high.

- **Application Scenarios**
  When users have a Time of Use (TOU) rate plan.
- **Related Settings**

4.1.4 Grid peak-shaving Function

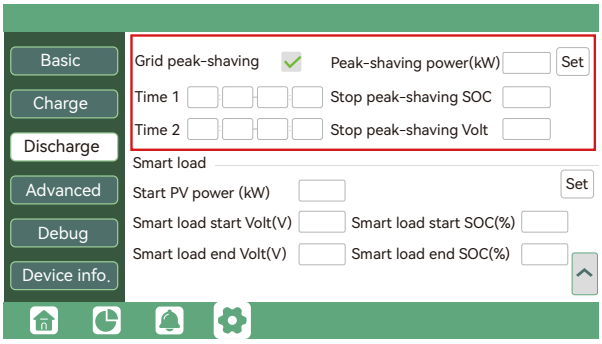

- **Grid peak-shaving & Grid peak-shaving power(kW):** Is used to set the maximum power that the inverter wil draw from its grid power.

4.1.5 Smart load Function

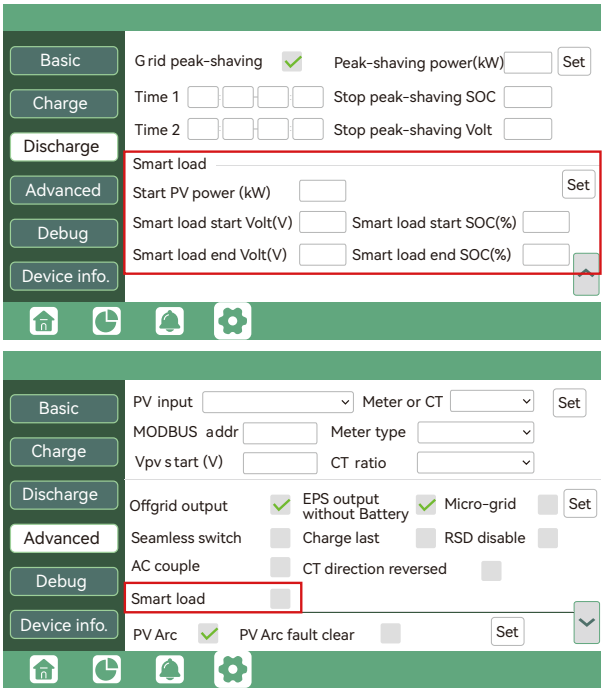

- **Smart Load:** This function is to make the Gen input connection point as an load connection point, if you enable it, inverter will supply power to this load when the battery SOC and PV power is above a user setup value. e.g. Smart load start SOC=90%, Smart load end SOC=85%, Start PV power=300W, it means: When the PV power exceeds 300W, and battery system SOC gets to 90%, Smart Load Port will switch on automatically to supply the load which is connected on this side. When the battery SOC<85% or PV power<300w, the Smart Load Port will switch off automatically.

Note:

If you enable the Smart load function, it's forbidden to connect the generator at the same time, otherwise the device will be damaged!

4.2 LCD Display

Users can view inverter running status, real time power, daily and accumulated energy information conveniently on inverter LCD. In addition to the above information, users can also check alarm and fault record on the display for troubleshooting.

4.2.1 Viewing information and alarm/fault record

- **Home Page**

  Touch the screen to light it up if it's in sleep mode. The Home page will appear on the display. Users will see a system overview diagram along with the real time information of each component, such as battery SOC, battery charging/discharging power, grid import/export power, load power, etc. On the right part of the screen, users can check daily and accumulated solar energy, battery charged/discharged energy, grid imported/exported energy, as well as load consumption.

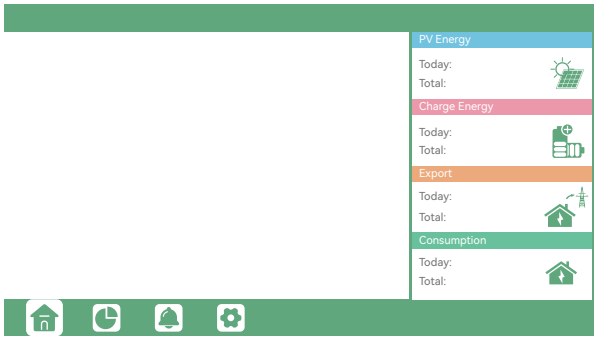

- **Detailed System Information**

  Click on the pie icon at the bottom of the screen and, you'll be able to view the detailed real time solar information, battery information, grid information and EPS output information.

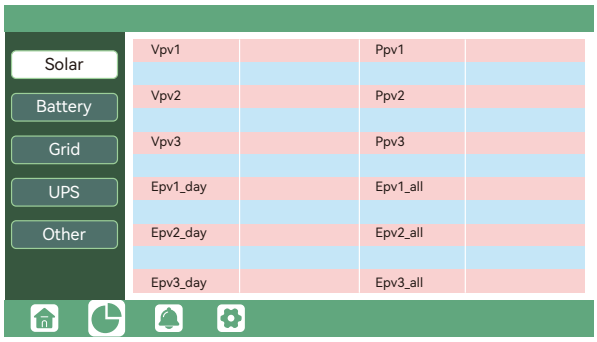

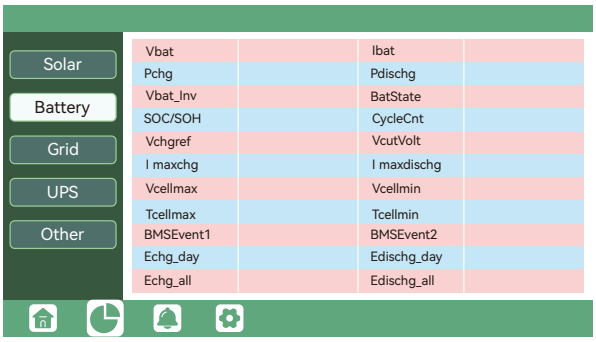

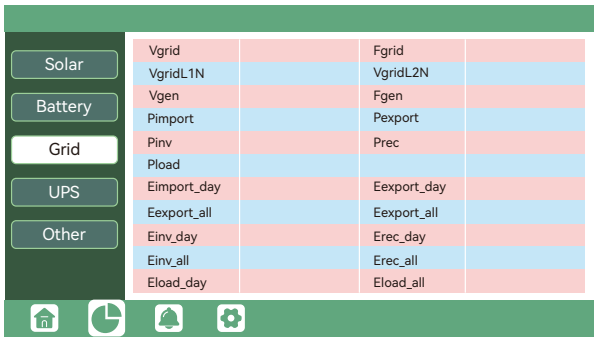

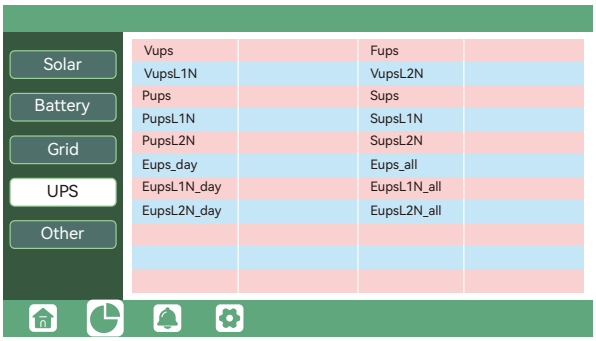

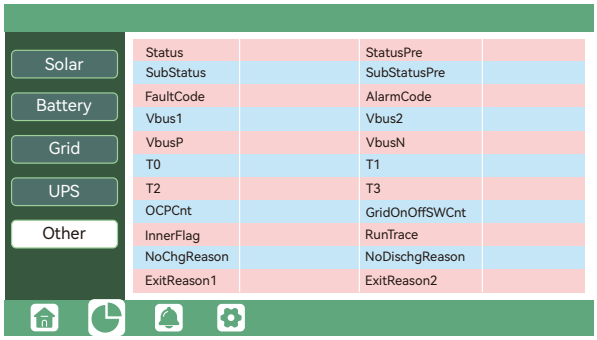

- **Fault/Alarm Information**

  Touching the bell icon at the bottom of the screen, you'll see all current and historical fault&warning information on this page.

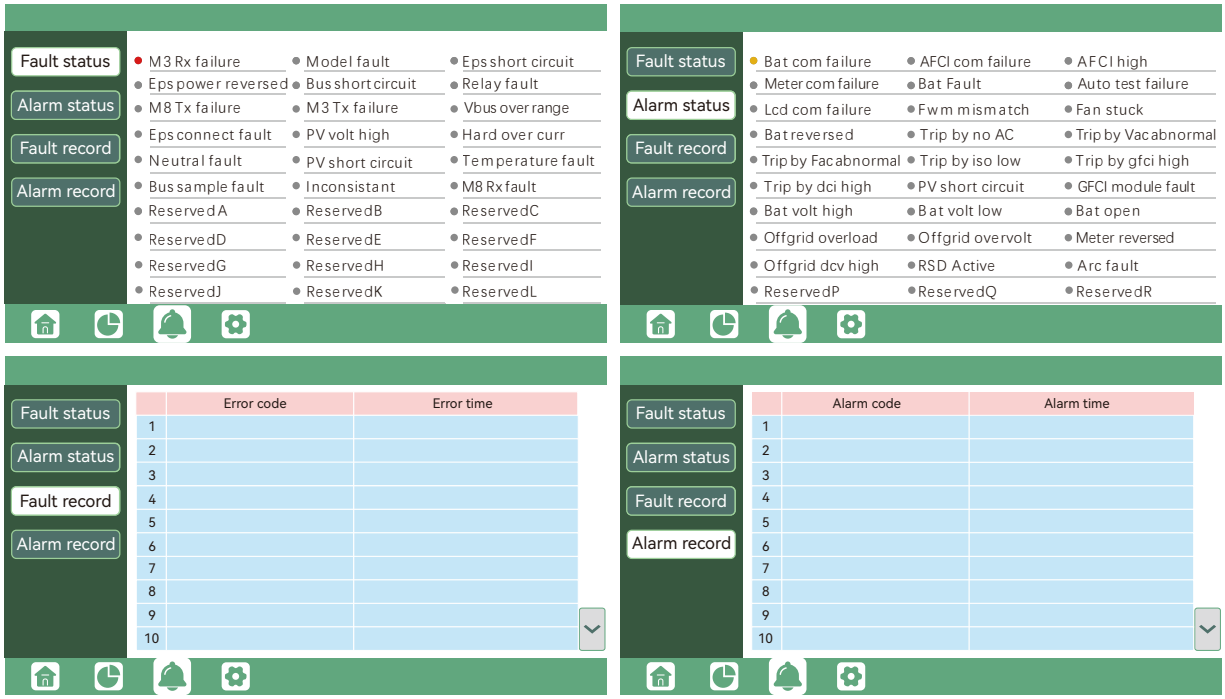

4.2.2 Setting Parameters

Clicking on the gear icon at the bottom of the screen, you'll get into the parameter setting page of the inverter.

a. Basic settings

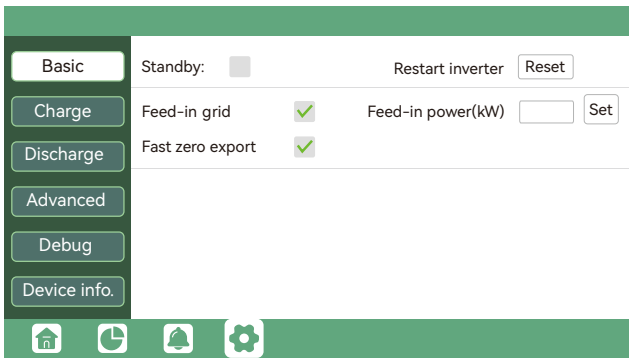

- **Feed-in Grid:** Is for users to set zero export function. If exporting solar power is not allowed, users need to disable "Feed-in Grid" option. If users' utility meter will be tripped with even a little solar export, "Fast zero export" can be enabled thus the export detection and adjustment will take place every 20mS, which will effectively avoid any solar power being exported. If export is allowed, users can enable "Feed-in Grid" and set a maximum allowable export limit in "Feed-in Power"(kW).
- **Standby:** Is for users to set the inverter to normal status or to standby status. In standby status, the inverter will stop any charging or discharging operation, as well as solar-feed-in.
- **Restart inverter:** Restart the system, please note the power maybe interrupted when restart.

b. Charge setting

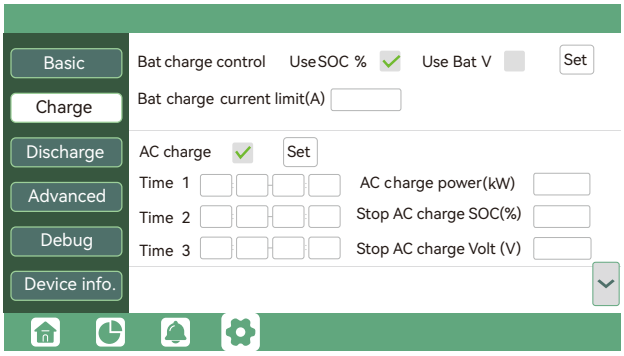

- **Bat charge control:** Users can decide to use SOC or BatV to control charge and discharge logic depends on battery type.
- **Bat charge current lim it(A):** users can set Max charge current.
- **AC Charge:** Setting for utility charge. If users want to use grid power to charge battery, then they can enable "AC Charge", set time periods when AC charging can happen, AC Charge power(kW) to limit utility charging power, and "Stop AC Charge SOC(%)" as the target SOC for utility charging. "Stop AC Volt(V)" as the target battery voltage for utility charging.

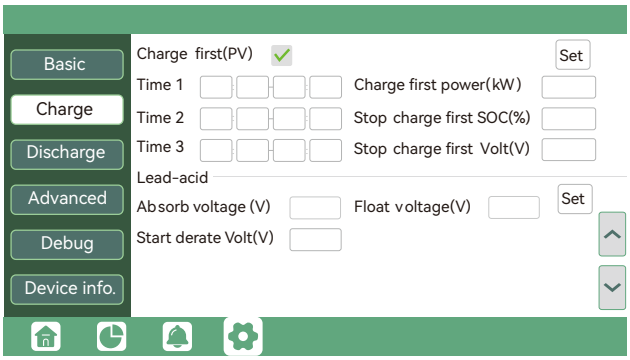

- **Charge first:** Setting for PV charge. When uses enable Charge first, PV will charge the battery as priority, set time periods when PV charge can happen, Charge first power(kW) to limit PV charge power, and "Charge first SOC(%)" as the target SOC for PV charge first. "Charge first Volt(V)" as the target battery voltage for PV Charge first.
- **Lead acid:** When uses connect Lead-acid battery, need set parameter in these programs, follow the battery manufacturer's recommendation.

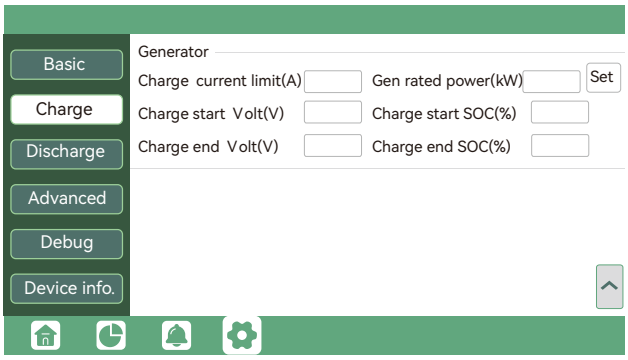

Generator

- **Bat charge current limit(A):** Set the Max. battery charge current from the Generator. The Generator will start charging according to the Charge start Volt /SOC, and stop charging when the battery voltage or SOC reaches the Charge end Volt/SOC value.
- **Gen rated power:** Inverter has the peak-shaving function, when you need you can enable it and setup the Gen peak shaving power(W).

c. Discharge setting

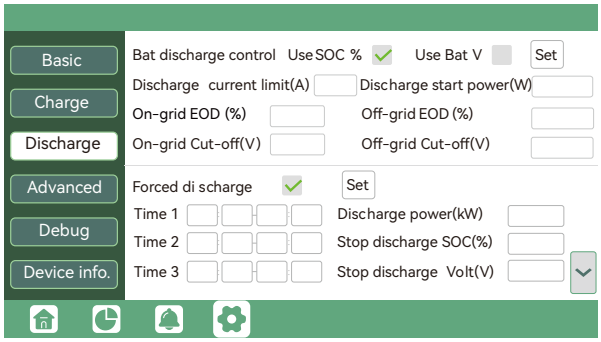

- **Bat discharge control**
  You can choose "Use SOC %" or Use Bat V" to control the battery discharge state

- **Discharge current limit(A):** The Max. discharge current from battery.
- **Discharge start power(W):** The Min. value can be set to 50. When the inverter detects the import power is higher than this value, battery start discharging, otherwise battery will keep standby.
- **On-grid EOD(%) and Off-grid EOD(%) /On-grid Cut-off(V) and Off-grid Cut off(V):** End of discharge SOC/Cut off voltage in on-grid and off-grid condition respectively.
- **Forced discharge:** Settings for battery force discharge within certain time period. In the preset time period, the inverter will discharge battery at the power set by "discharge power", until battery SOC or voltage reaches "Stop discharge "value.

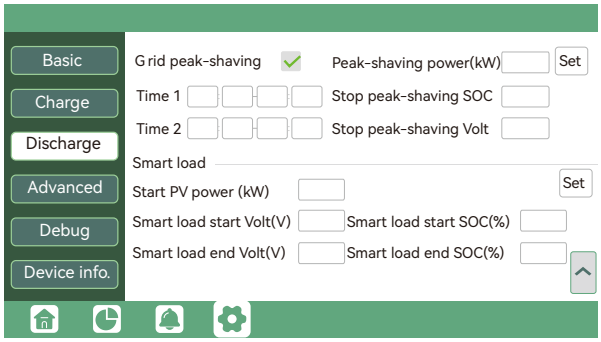

Note: If you enable the Smart load function, it's forbidden to connect the generator at the same time, otherwise the device will be damaged!

- **Grid peak-shaving & Grid peak-shaving power(kW):** Is used to set the maximum power that the inverter will draw from its grid power.
- **Smart Load:** This function is to make the Gen input connection point as an load connection point, if you enable it, inverter will supply power to this load when the battery SOC and PV power is above a user setup value. e.g. Smart load start SOC=90%, Smart load end SOC=85%, Start PV power=300W, it means: When the PV power exceeds 300W, and battery system SOC gets to 90%, Smart Load Port will switch on automatically to supply the load which is connected on this side. When the battery SOC<85% or PV power<300w, the Smart Load Port will switch off automatically.

d. Advanced setting

Advanced setting is mainly by installer after installation.

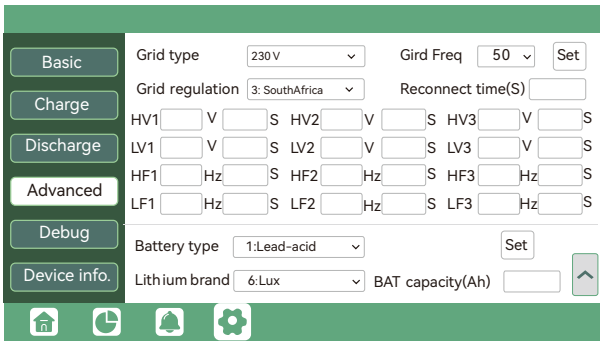

- **Grid type:** You can choose by yourself, 230V
- **Grid regulation:** Please choose SouthAfrica or General
- **Battery type:** No battery, lead-acid or lithium-ion.
- If lead-acid battery is selected, please input correct battery capacity
- If lithium-ion battery is selected, please choose the battery brand in the Lithium brand drop down list.

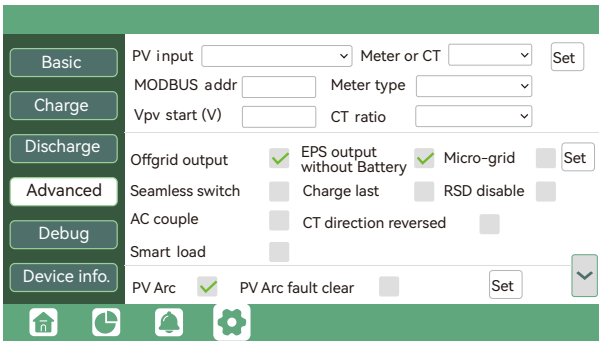

The supported CT ratio is 1000:1 and 3000:1. default CT ratio is 1000:1. If 3rd party CT is to be used, please ensure its CT ratio is either 1000:1 or 3000:1, and set it accordingly. the battery brand in the Lithium brand drop down list.

- **Meter type:** Please select it according to the meter that's to be installed.

- **Offgrid output:** Is for users to set if the inverter provides backup power or not when the grid is lost. If users want load to be seamlessly transferred to inverter backup power, “Seamless switch” must be enabled. If customers don't have battery installed yet, but still wish to have inverter backup power with only solar panels connected, “PV Grid Off” can be enabled to use solar power to supply load when grid fails or load-shedding happens. Micro-grid: only needs to be set when generator is connected at the inverters grid port. With this option enabled, the inverter will use AC power to charge battery and won't export any power through grid port if AC power is present at inverter grid port.
- **Charge last:** When users want to use solar power in the order of loads -- grid export -- battery charging.
- **AC couple:** When you want to use the inverter as an ac coupled model, you can enable
- **CT direction reversed:** If the CTs are in a wrong direction which will cause the display to show incorrect information and features of the inverter will not function correctly, the installer can modify it by selecting it(only for direction not CT placement), there is no need to reconnect the CTs and no need to go change it physically, in the order of loads--grid export--battery charging.

4.3 Start-up and shut down the inverter

4.3.1 Start up the inverter

Step 1. Turn on the battery system firstly, then turn on the DC breaker between battery and inverter.

Step 2. Make sure the PV voltage of the strings are higher than 120V, and check if the inverter works in PV charge or PV charge back-up mode.

Step 3. Make sure step1and 2 above work properly before turning on the grid power or generator breaker, and check if the inverter can go to bypass mode and on-grid mode normally.

4.3.2 Shut down the inverter

Danger: Do not disconnect the battery , PV and AC input power under load.

If there is emergency issue , and you have to shut down the inverter ,please follow the steps as below.

Step 1. Turn off the Grid breaker of the inverter.

Step 2. Switch off the load breaker.

Step 3. Turn off PV breaker and then battery breaker, waiting for the LCD to go off.

5. Troubleshooting&Maintenance

5.1 Regular Maintenance

- **Inverter Maintenance**

  a. Check the inverter every 6 months or 1 year to verify if there are damages on cables, accessories, terminals and the inverter itself.

  b. Check the inverter every 6 months to verify if the operating parameter is normal and there is no abnormal heating or noise from the inverter.

  c. Check the inverter every 6 months to confirm there is nothing that covers the inverter heat sink, if there is, shut-down the inverter and clear the heat sink.

- **Battery Maintenance**

  Follow the manufacturer's requirements on maintenance. When you carry out these works on batteries, please make sure to fully shut-down the inverter for safety consideration.

5.2 LED Displays

LED	Display	Description	Suggestion
Green LED	Solid lit	Working normally	
	Flashing	Firmware upgrading	Wait till upgrading complete
Yellow LED	Solid lit	Warning, inverter working	Need troubleshooting
Red LED	Solid lit	Fault, inverter stop work	Need troubleshooting

5.3 Troubleshooting Based On LCD Displays

Once there is any warning or fault occurring, users can troubleshoot according to the LED status and the warning/fault information on the LCD.

1. Fault on the LCD

If the dot on the left of fault item is red, it means the fault is active. When it is grey, it means the fault is defective.

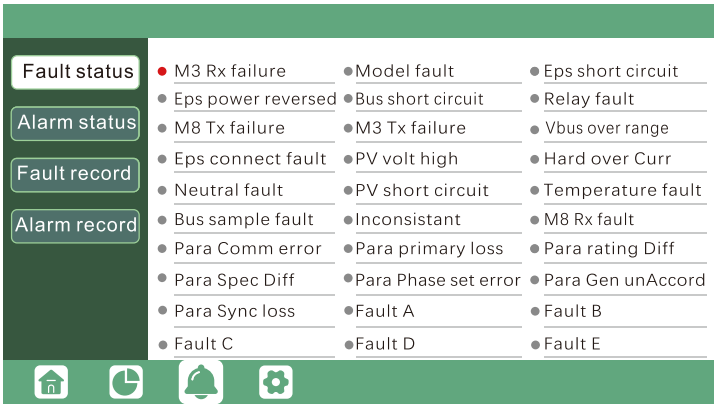

Fault	Meaning	Troubleshooting
M3 Rx failure	M3 microprocessor fails to receive data from DSP	Restart inverter, if the error still exists, contact your supplier.
Model fault	Incorrect model value	
EPS short circuit	Inverter detected short-circuit on EPS output terminals	1. Check if the L1, L2 and N wires are connected correctly at inverter EPS output port; 2. Disconnect the EPS breaker to see if fault remains. If fault persists, contact your supplier.
Eps power reversed	Inverter detected power flowing into EPS port	Restart inverter, if the error still exists, contact Luxpower service or your inverter supplier.
Bus short circuit	DC Bus is short circuited	
Relay fault	Relay abnormal	
M8 Tx failure	DSP fails to receive data from M8 microprocessor	
M3 Tx failure	DSP fails to receive data from M3 microprocessor	
Vbus over range	DC Bus voltage too high	Please check if the PV string voltage is within the inverter specification. If string voltage is within range, and this fault still appears, contact Luxpower service or your inverter supplier.
Eps connect fault	EPS port and grid port are connected mixed up	Check if the wires on EPS port and grid port are connected correctly. If the error exists, contact Luxpower service or your inverter supplier.
PV volt high	PV voltage is too high	Please check if the PV string voltage is within the inverter specification. If string voltage is within range, and this fault still appears, contact Luxpower service o your inverter supplier.
Hard over curr	Hardware level over current protection triggered	Restart inverter, if the error still exists, contact Luxpower service or your inverter supplier.
Neutral fault	Voltage between N and PE is greater than 30V	Check if the neutral wire is connected correctly.
PV short circuit	Short circuit detected on PV input	Disconnect all PV strings from the inverter. If the error persists, contact Luxpower service or your inverter supplier.
Temperature fault	Heat sink temperature too high	Install the inverter in a place with good ventilation and having no direct sunlight. If the installation site is okay, please check if the NTC connector inside the inverter is loose.
Bus sample fault	Inverter detected DC bus voltage lower than PV input voltage	Restart inverter, if the error still exists, contact Luxpower service or your inverter supplier.
Inconsistant	Sampled grid voltage values of DSP and M8 microprocessor are inconsistent	
M8 Rx fault	M8 microprocessor fails to receive data from DSP	

2. Alarm on the LCD

If the dot on the left of fault item is yellow, it means the fault is active. When it is grey, it means the fault is deactive

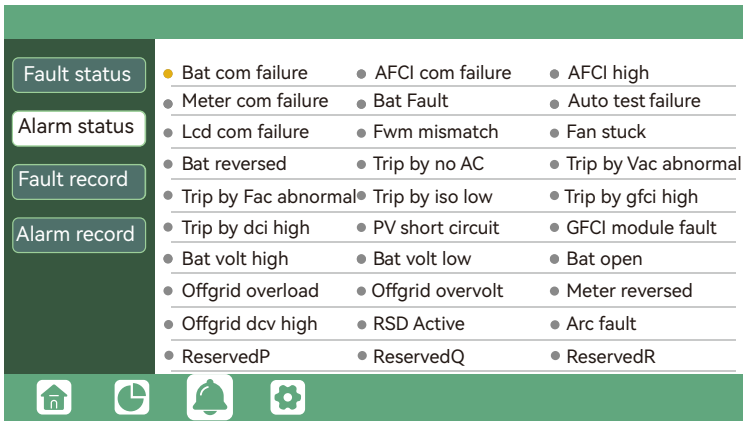

Alarm	Meaning	Troubleshooting
Bat com failure	Inverter fails to communicate with battery	Check if communication cable is correct, and if you have chosen the correct battery brand on inverter LCD. If all is correct but this error persists, please contact Luxpower service or your inverter supplier.
Meter com failure	Inverter fails to communicate with the meter	1. Check if the communication cable is connected correctly and in good condition. 2. Restart inverter. If the fault persists, contact Luxpower service or your inverter supplier.
Bat Fault	Battery cannot charge or discharge	1. Check the battery communication cable for correct pinout on both inverter and battery end; 2. Check if you have chosen an incorrect battery brand; 3. Check if there is fault on battery's indicator. If there is fault, please contact your battery supplier.
Auto test failure	Auto test failed	Only applied to Italy model
Lcd com failure	LCD fails to communicate with M3 microprocessor	Restart inverter. If fault still exists, contact Luxpower service or your inverter supplier.
Fwm mismatch	Firmware version mismatch between the microprocessors	
Fan stuck	Cooling fan(s) are stuck	
Trip by gfci high	Inverter detected leakage current on AC side	1. Check if there is ground fault on grid and load side; 2. Restart inverter. If the fault remains, contact Luxpower service or your inverter supplier.
Trip by dci high	Inverter detected high DC injection current on grid port	Restart inverter. If the fault remains, contact Luxpower service or your inverter supplier.
PV short circuit	Inverter detected short circuited PV input	1. Check if each PV string is connected correctly; 2. Restart inverter. If the fault remains, contact Luxpower service or your inverter supplier.
GFCI module fault	GFCI module is abnormal	Restart inverter. If fault still exists, contact Luxpower service or your inverter supplier.
Bat volt high	Battery voltage too high	Check if battery voltage exceeds 59.9V, battery voltage should be within inverter specification.
Bat volt low	Battery voltage too low	Check if battery voltage is under 40V, battery voltage should be within inverter specification.

Bat open	Battery is disconnected from inverter	Check battery breaker or battery fuse.
Offgrid overload	Overload on EPS port	Check if load power on inverter EPS port is within inverter specification.
Offgrid overvolt	EPS voltage is too high	Restart inverter. If fault still exists, contact Luxpower service or your inverter supplier.
Meter reversed	Meter is connected reversely	Check if meter communication cable is connected correctly on inverter and meter side.
Offgrid dcv high	High DC voltage component on EPS output when running off-grid	Restart inverter. If fault still exists, contact Luxpower service or your inverter supplier.

5.4 Fan replacement

Please check and clean the fans regularly. The recommended period is 6 months.

Please replace the fan following up the below diagram if there is problem with the fans. Turn off the system and wait for more than 5 minutes before disassembling the machine.

a. Open the wiring cover

b. Unplug the fan cable

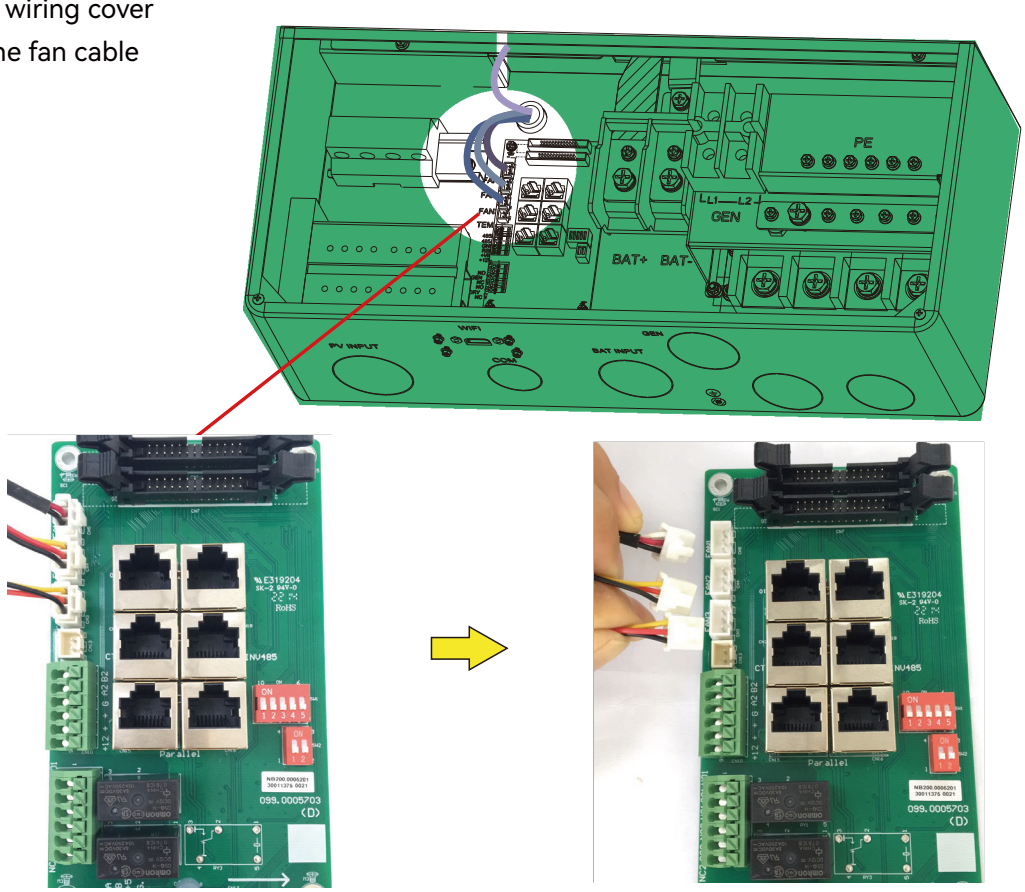

c. Loosen the screws and remove them

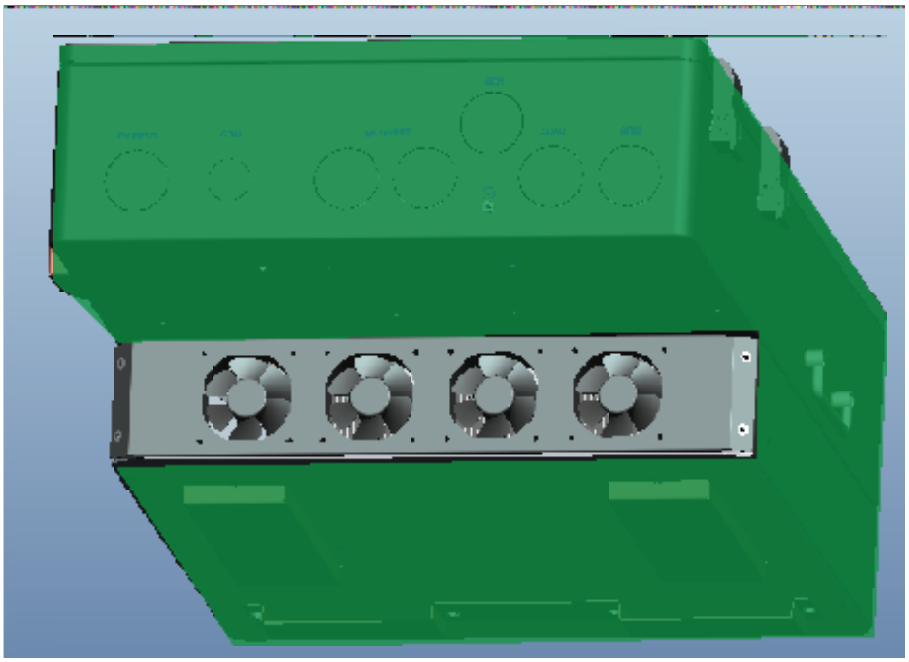

d. Remove the fan fixing

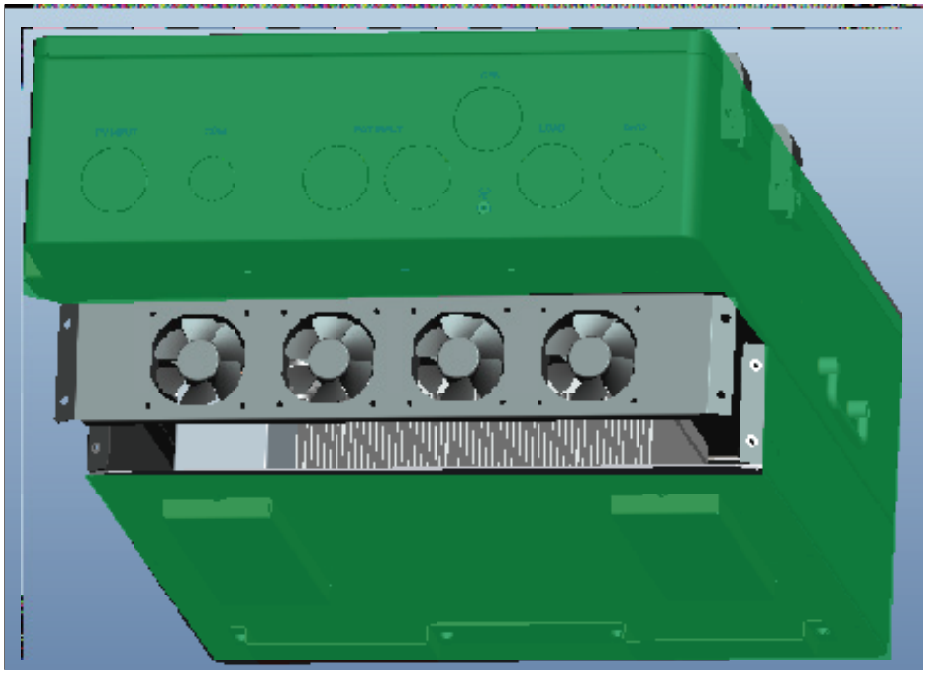

e. Loosen the waterproof connector

f. Remove the fan and replace it

g. After the fan is installed, follow the steps just now to push back and assemble it back

PV Input data	12K
Max. usable input current(A)	25/15/15
Max. short circuit input current(A)	34/17/17
Start input voltage(V)	100
Startup voltage(V)	140
Full power MPPT voltage range(V)	230-500
DC nominal voltage(V) MPPT tracker	360
DC voltage range(V)	100-600
MPP operating voltage range(V)	120-500
Max. power(W)	18000
Number of MPPT	3
Inputs per MPPT	2/1/1
AC Grid output data	
Nominal Output Current(A)	50
Max. Output Current(A)	50
Rated voltage(V)	230
Operating voltage range(V)	180-270
Nominal power output(W)	11500
Operating frequency(Hz)	50
Operating frequency range(Hz)	50
Phase shift	0.99@full load
Reactive power adjust range	-0.8~+0.8 leading Adjustable
THDI	< 3%
Sync inrush curent(A)	35
UPS AC output data	
Nominal output current(A)	50
Nominal output voltage(V)	230
Rated output power(VA)	11500
Operating frequency(Hz)	50
Peak power(VA)	2×Pn, 0.5s
THDV	< 3%
Switching Time	< 20
Efficiency	
Max. Efficiency@PV to grid	97.5%
Max. Efficiency@battery to grid	94%
MPPT Efficiency	99.9%
Battery data	
Type	Lead-acid battery/Lithium battery
Max. charge current(A)	250
Max. discharge current(A)	250
Norminal voltage(V)	48
Voltage range(V)	40-60
General data	
Integrated disconnect	DC switch
Reverse polarity protection	Yes
DC switch rating for each MPPT	Yes
Output over-voltage protection varistor	Yes
Output over current protection	Yes
Ground fault monitoring	Yes
Grid monitoring	Yes
Pole sensitive leakage current Monitoring unit	Yes
Dimensions(mm)	670*490*265mm(22.8*19.3*10.4inch)
Weight(kg)	50kg(96.8 lbs)
Degree of protection	NEMA4X / IP 65
Cooling concept	FAN
Topology	Transformer-less
Relative humidity	0-100%
Altitude(m)	< 2000m
Operating temperature range (℃)	-25~60℃, > 45℃ Derating
Noise emission(dB)	<50dB
Internal consumption(W)	<15W
Display	Touch color screen
Communication interface	RS485/ Wi-Fi/ CAN
Standard warranty	5years

YOUR RELIABLE ENERGY SOLUTIONS PARTNER

luxpowertek

Lux Power Technology Co., Ltd
Headquarter: +86 755 8520 9056
www.luxpowertek.com
Contact us: info@luxpowertek.com

092.20054AB