Hybrid Inverter User Manual

GEN-LB-US 9.6K PRO
GEN-LB-US 12K PRO
GEN-LB-US 13K PRO
GEN-LB-US 16K

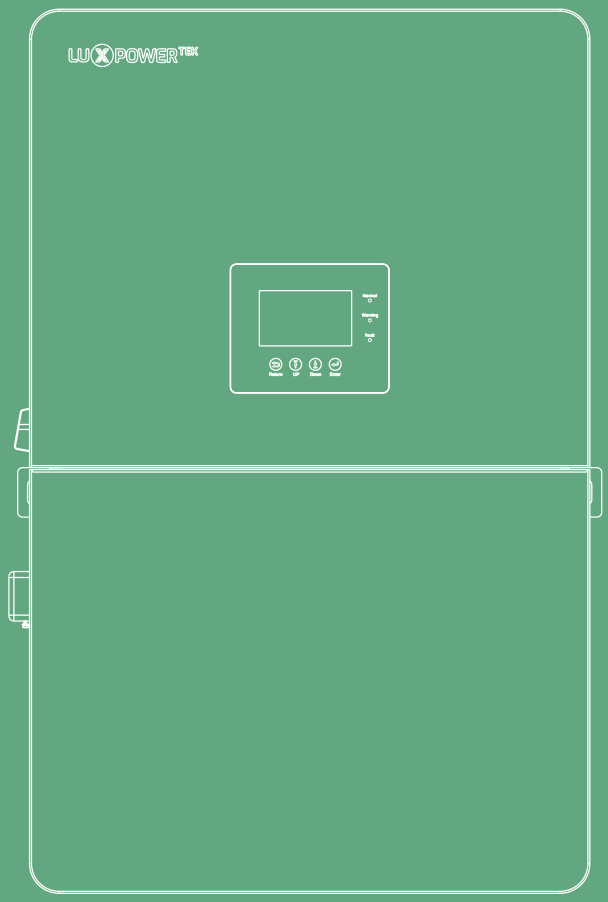

LUXPOWERTEK

Version: UM-GENUS02001E02

Copyright© 2026 Lux Power Technology Co., Ltd. All Rights Reserved. This manual, protected by the copyright and intellectual property rights of Lux Power Technology, may not be modified, copied, or reproduced without prior written permission. Brands and trademarks mentioned belong to their respective owners. Read carefully for product reliability and warranty eligibility. For warranty details, refer to Lux Power Technology Limited Warranty. Intended for professional service providers; no statements constitute an express or implied warranty.

Descriptions may contain predictive statements; differences may occur. Provided for reference, subject to change without notice by Lux Power Technology.

Website

YouTube

Facebook

www.luxpowertek.com

GEN-LB-US 16K Series

Scan to download

Table Of Contents

1. Safety 1

1.1 Safety Instruction 1

2. Brief Introduction 3

2.1 System Solution 3

3. Installation 4

3.1 Packaging List & Storing 4

3.2 Location Selection and Installation 4

3.3 Connection Overview 9

3.4 PV Connection 11

3.5 Battery Connection 12

3.6 Grid&EPS load Connection 14

3.7 Working with Generator 19

3.8 AC Coupling Installation Connection 21

3.9 Parallel System Connection 22

3.10 Monitor System Setup 27

4. Operation Guide 30

4.1 Operation Mode and Function 30

4.2 Rapid shutdown 33

4.3 LCD Display 33

4.4 Start-up and shut down the inverter 37

5. Troubleshooting&Maintenance 38

5.1 Regular Maintenance 38

5.2 LED Displays 38

5.3 Troubleshooting Based On LCD Displays 38

5.4 Fan replacement 42

6. Annex1: Technical Data 44

6.1 Remote control inverter on/off and modify parameter settings 44

6.2 Parameter setting according to Rule21 45

6.3 Test parameter tolerances 50

7. Annex2: Lithium Brand Reference 51

Revision History

Version	Date	Description
UM-GENUS02001E01	2025.04.24	First official release
UM-GENUS02001E02	2026.03.30	New models and related information added.

1. Safety

1.1 Safety Instruction

General Safety Instructions

International safety regulations have been strictly observed in the design and testing of the inverter Prior to any work, carefully read all safety instructions and observe them at all times when working on or with the inverter. The installation must adhere to all applicable national or international standards or regulations.

Incorrect operation or work may cause:

- injury or death to the operator or a third party.
- damage to the inverter and other properties belonging to the operator or a third party.

Important Safety Notifications

There are various safety issues that must be carefully conveyed prior to during and after the installation, as well as during future operation and maintenance. The following are important safety notifications for the operator, owner and user of this product under normal conditions of use.

⚠ DANGER

Dangers of High Voltages and Large Current

- Beware of high PV voltage. Please turn-off the DC switch of PV Panel output before and during the installation to avoid electric shock.
- Beware of high grid voltage. Please turn-off the AC switch at the grid connection before and during the installation to avoid electric shock.
- Beware of large current of the battery output. Please turn-off the battery module before and during the installation to avoid electric shock.
- Do not open the inverter when it's working to avoid electric shock and damage from live voltage and current from the system.
- Do not operate the inverter when it's working, only the LCD and buttons can be touched in limited cases by qualified personnel, other parts of the inverter can be touched when the inverter is in a a safe state (e.g. fully shut-down).
- Do not connect or disconnect any connection (PV, battery, grid, communication etc.) of the inverter when it's working.
- Make sure the inverter is well grounded, an operator should make sure he is well protected by reasonable and professional insulation measurements (e.g. personal protective equipment (PPE)).
- Inspect relevant existing wiring on-site of the installation is in good condition before installation, operation or maintenance.
- Inspect that connections are good between the inverter and PV, battery and grid during installation to prevent damages or injuries caused by bad connections.

WARNING

Avoid Misoperation and Inappropriate Usage

- All the work of this product (system design, installation, operation, setting, configuration and maintenance must be carried out by qualified personnel as required.
- All connections must be in accordance with local and national regulations and standards.
- The inverter and system can inter-connected with the utility grid only if the utility grid permits it.
- All the warning labels or nameplates on the inverter must be clearly visible and must not be removed, covered or pasted.
- The installation should consider the safety of future users when choosing the right position and location as specified in this manual.
- Please keep the children away from touching or misusing the inverter and relevant systems.
- Beware of burning hurt, the inverter and some parts of the system could be hot when working, please do not touch the inverter surface or most of the parts when they are working. During inverter working states, only the LCD and buttons could be touched.

NOTICE

- Please carefully read this manual before any work is carried out on this inverter, the installation, please keep this manual carefully stored and easy to access at any time.
- The qualified personnel should have had training in the installation and commissioning of the electrical system as well as dealing with hazards, also they should have the knowledge of the manual and other related documents. As the installer or operator they are required to be familiar with local regulations and directives.

2. Brief Introduction

2.1 System Solution

This product and its associated system are suitable for the following system applications (system diagram):

A. Solar and battery storage system

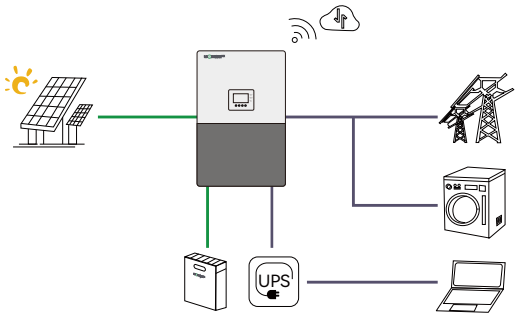

B. AC Coupling with existed solar system

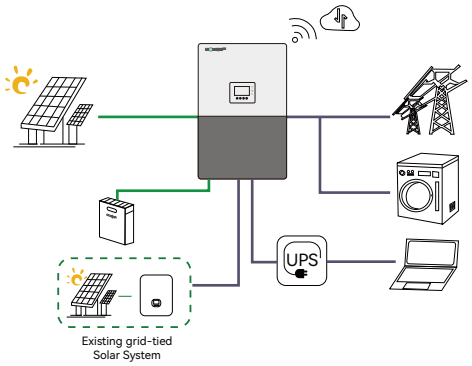

C. On-grid solar system without battery
(Support EPS even without battery)

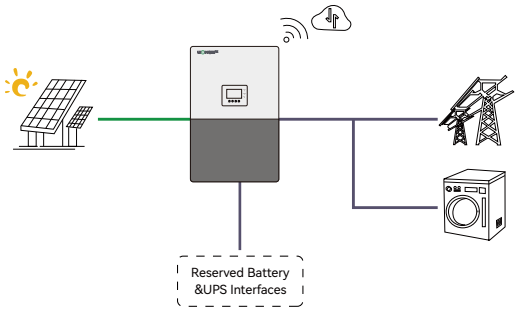

D. Off-grid and back-up applications

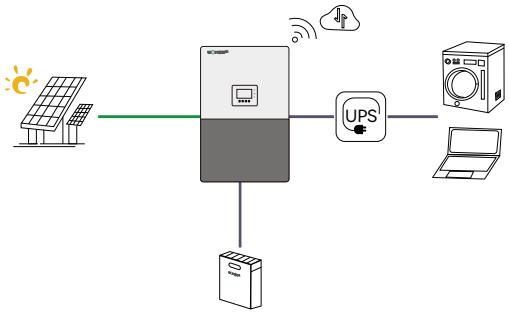

E. Single and three phase paralleling system

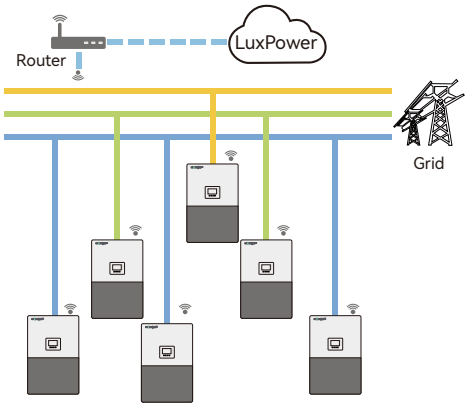

F. Energy storage system with peak shaving Function

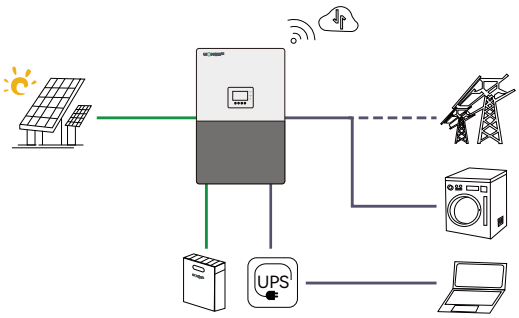

3. Installation

3.1 Packaging List & Storing

Packaging

When the packaging is unpacked, the inner components should match those listed in the list below.

Hybrid Inverter ×1

User Manual ×1

Expansion Screw and Tube 6+6

1" CT ×2

Paper board ×1

Wi-Fi dongle Optional ×1

Wall-mounted ×2

RJ 45 Terminal ×4

Battery communication cable L=2m×1(Orange)

Parallel communication cable L=2m×1(Grey)

Cross Head Screw M5*10 ×4

Cross Head Screw M3*10 ×4

Bracket: wall-mounted ×1

Pictures for reference only, subject to our available products.

3.2 Location Selection and Installation

3.2.1 Requirements for installation location

a. The mounting wall should be strong enough to bear the weight of the inverter.

b. Please maintain the minimum clearances presented below for adequate heat dissipation.

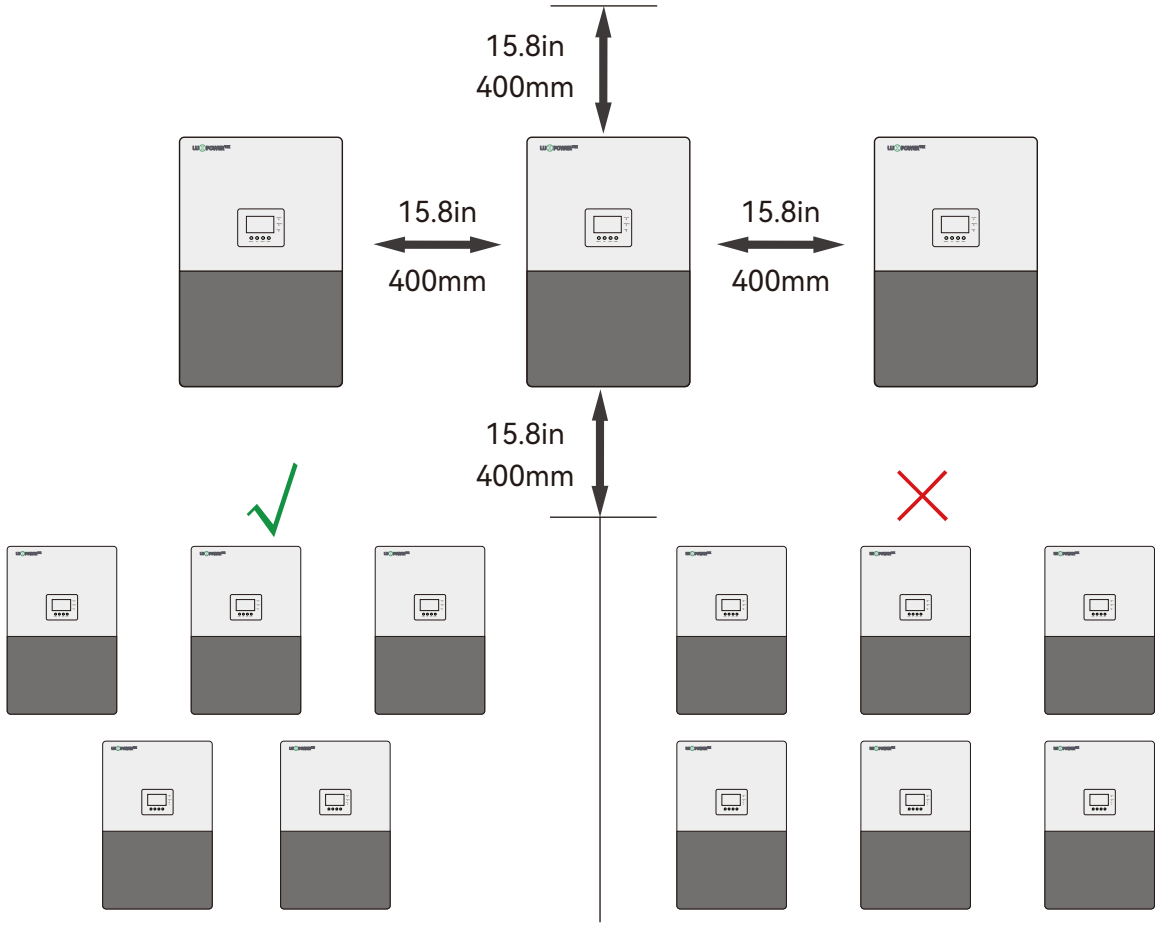

c. Never position the inverter in direct sunlight, rain, or snow. Please refer to the figure below and choose a well-shaded site or a shed to protect the inverter from direct sunlight, rain, and snow etc. PROTECT the LCD screen from excessive UV exposure.

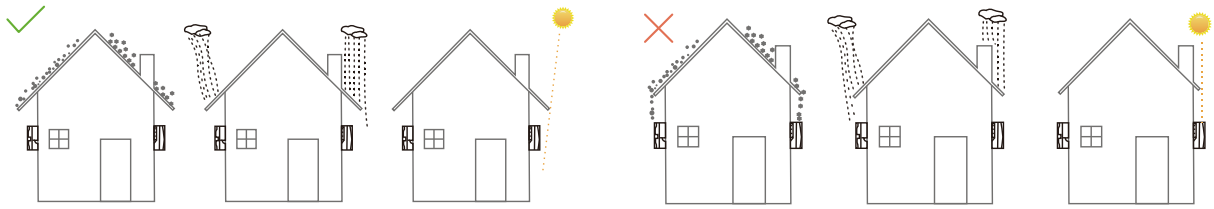

d. The inverter should be installed upright on a vertical surface.

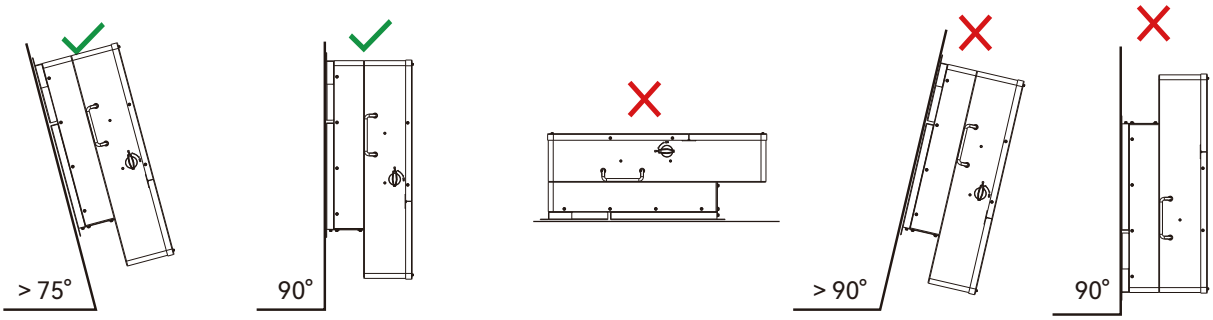

3.2.2 Remove the Knockout

Important Notice: Before mounting the machine on the wall, please ensure that the knockout holes on the machine are properly removed.

1. Tools Preparation
Please prepare the following tools: knockout punch, flathead screwdriver, hammer, safety goggles, brush or vacuum cleaner. (Ensure all tools are in good condition, and that the safety goggles provide adequate protection.)

2. Step-by-Step Procedure

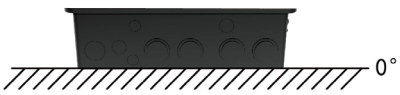 1. Place the inverter horizontally on a stable surface (such as a table or the floor) to ensure stability during operation and to prevent debris from falling inside.	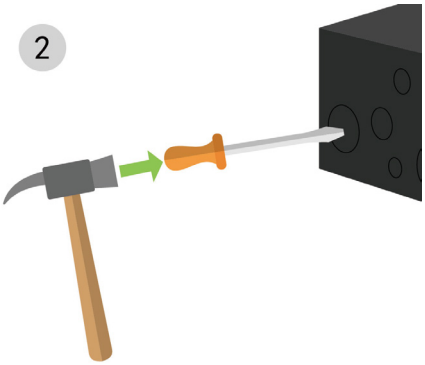 2. Select the appropriate knockout hole based on the cable routing, then lightly tap the edge of the knockout hole with a hammer and screwdriver.

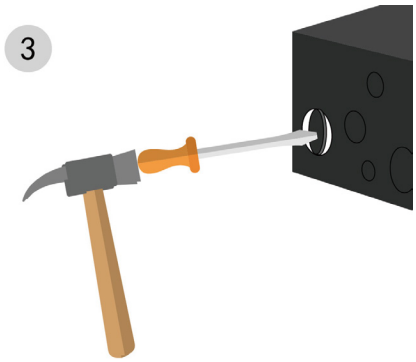

3. Loosen the knockout cover. Avoid using excessive force to prevent damaging the casing or internal circuits.

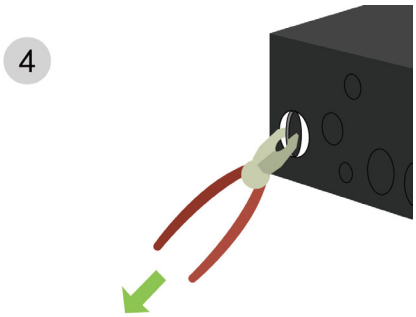

4. Use pliers to grip the loosened knockout cover and gently pull it out.

5. Use a brush or vacuum cleaner to clear any metal shavings that have fallen inside, ensuring no debris remains inside the device.

Note:
If the knockout hole is not filled after wiring, it must use a waterproof connector (such as a NEMA-rated cable gland) or sealing ring to cover the gap, preventing dust and water from entering.

3.2.3 Installing the inverter

The inverter is wall-mounted type and, should be installed on a vertical, solid mounting surface, such as wood studs, brick or concrete wall. Two or more persons may be needed to install the inverter due to its weight. The slots on the mounting bracket can accommodate various stud spacings from 12.0 inches (305mm) to 17.3 inches (440mm).

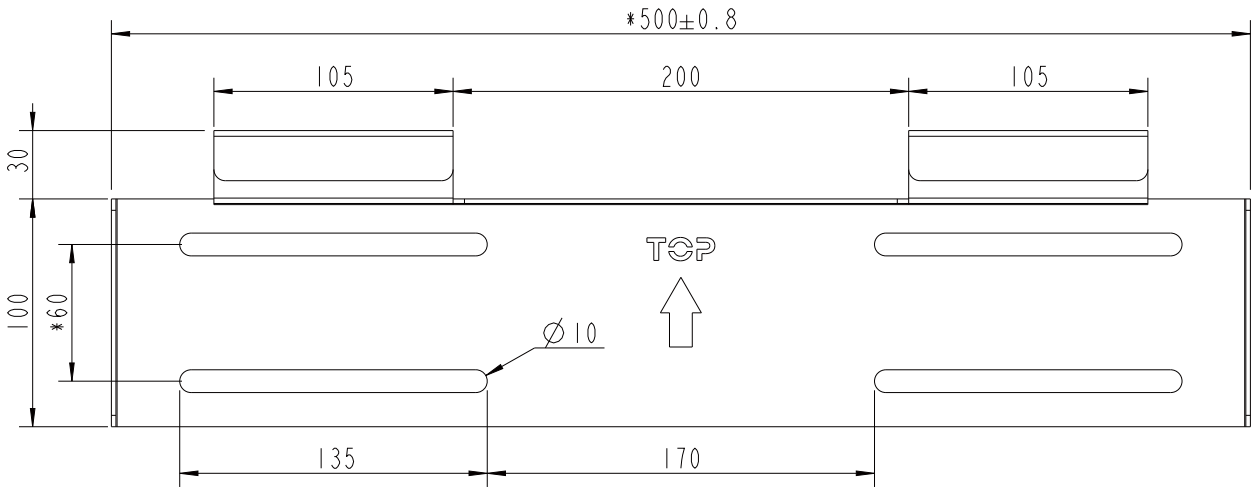

The mounting steps are as below: (Use brick wall as example).

Step 1. Mark the drill holes positions with the mounting bracket, then drill 4mm(0.31inch) diameter holes, making sure the depth of the holes is deeper than 50mm(2inches).

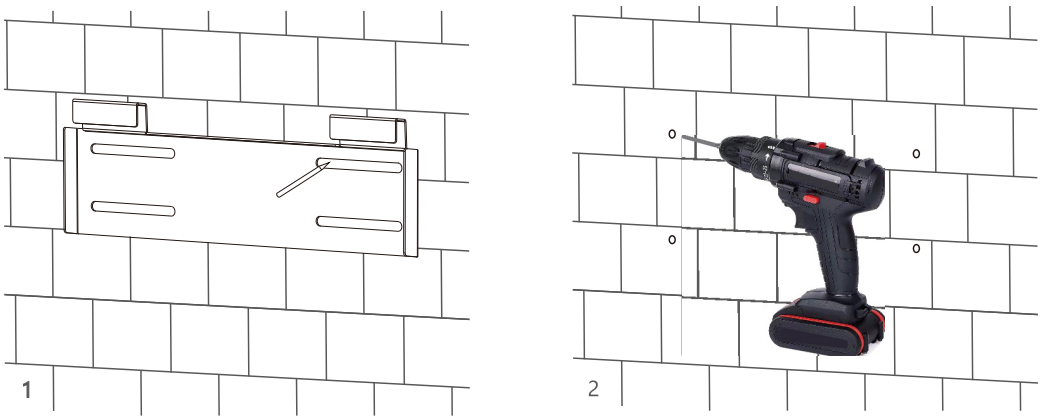

Step 2. Install and tighten the expansion bolts into the holes. Then use the corresponding nuts and washers (packaged together with the expansion bolts) to install and fix the wall-mounting bracket on the wall.

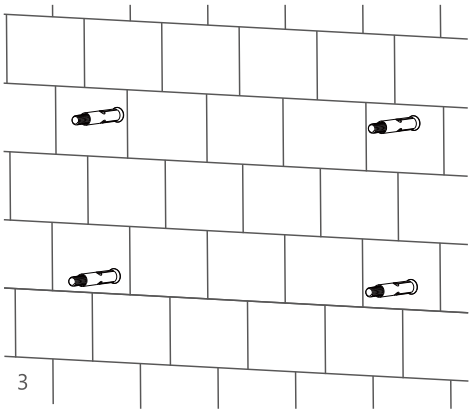

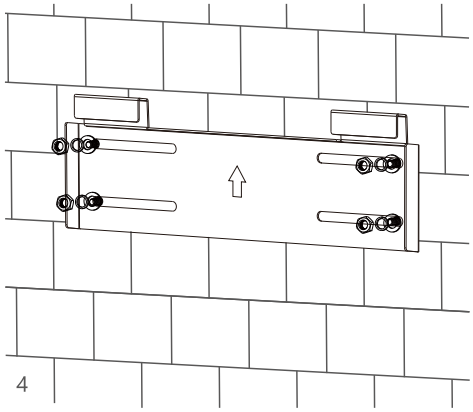

Step 3. Hang the inverter onto the wall-mounting bracket and lock the inverter on the wall using 2 self-tapping screws on the top of the inverter, lock the safety screws on the left and right sides.

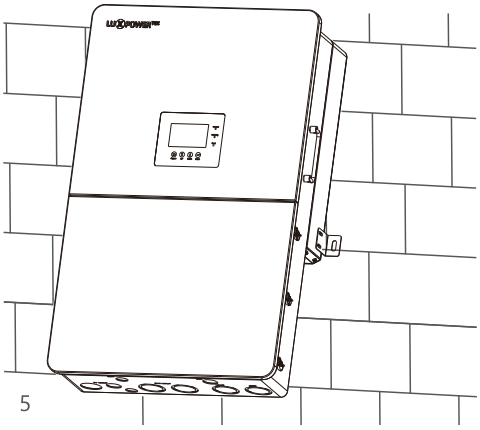

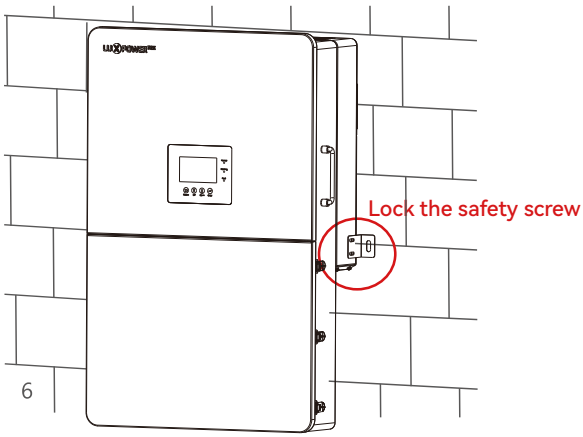

For installation on wood studs

Fasten the mounting bracket on the studs with 4 wood screws, then hang the inverter onto the bracket and lock the inverter on the wall with 2 self-tapping screws.

3.3 Connection Overview

3.3.1 System Connection

The system connection diagram is as below (for US version):

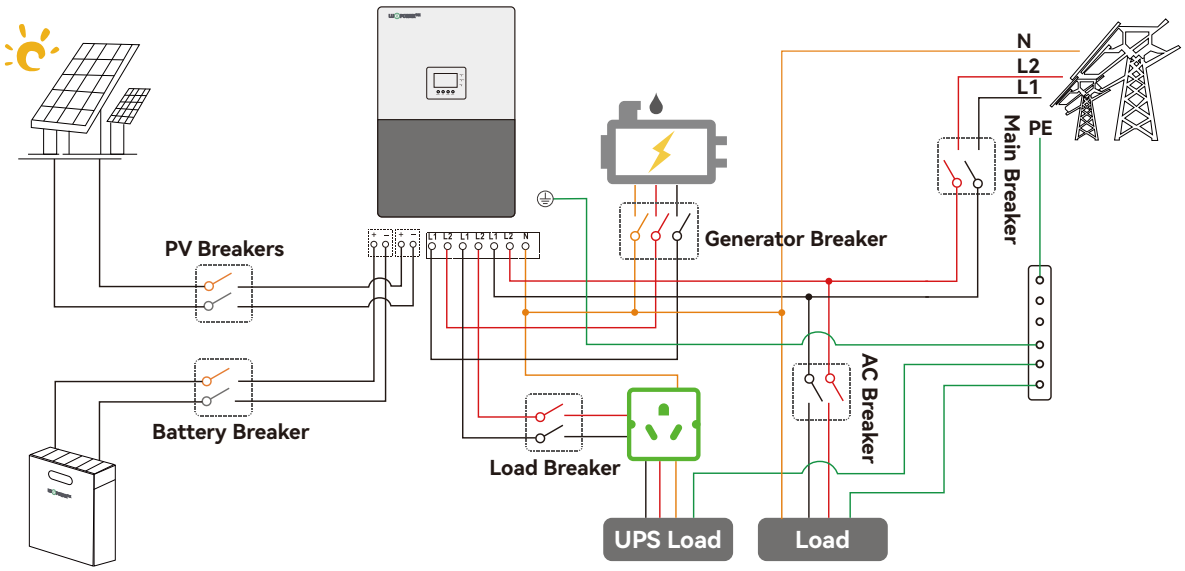

Breakers selection recommendation for both DC and AC

Inverter model	GEN-LB-US 9.6K PRO/12K PRO/13K PRO/16K
PV Breakers(2P×5)	MPPT1 string 1: 600V/20A MPPT1 string 2: 600V/20A MPPT2 string 1 : 600V/20A MPPT2 string 2 : 600V/20A MPPT3 : 600V/20A
Main Breaker(2P)	200A/240Vac when ups is used for whole home backup 100A/240Vac when ups is used for parital load backup
Generator Breaker	100A/240Vac
Integrated Battery Breaker	200A x2
Integrated Load Breaker	L1: 200A L2: 200A

Overview of Connection Ports

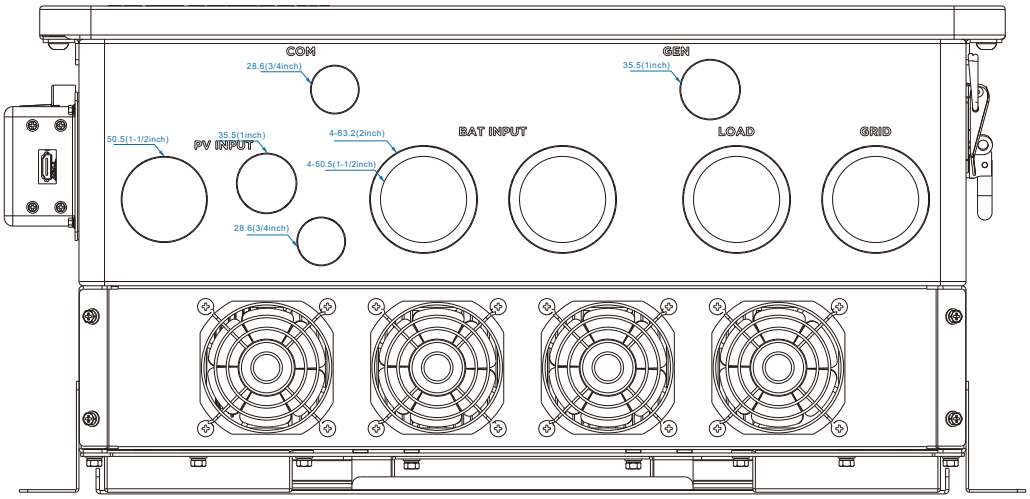

Overview of Terminal Box

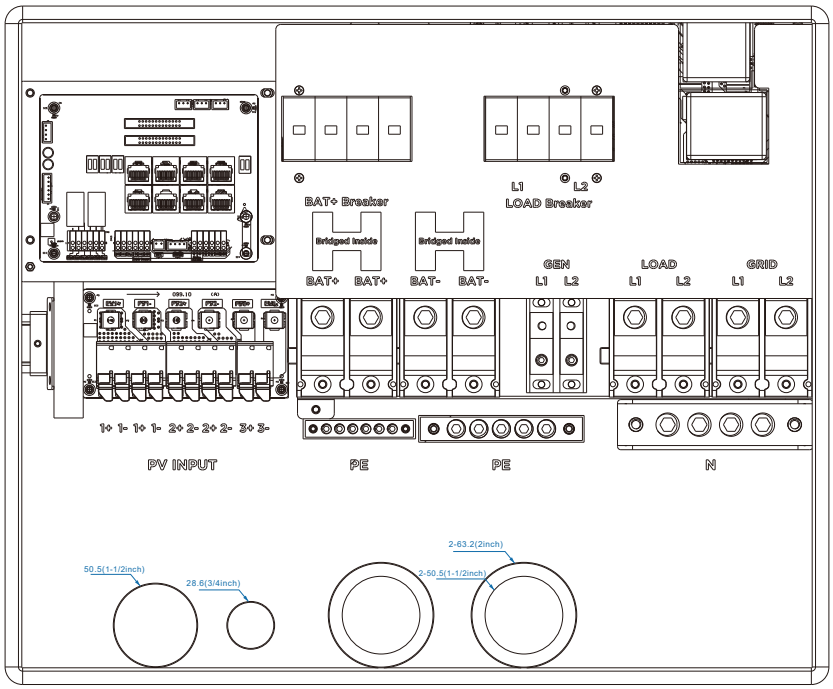

The inverter has integrated Load breaker and BAT breaker, and the Load breaker is 200A, the BAT breaker is 2x200A.

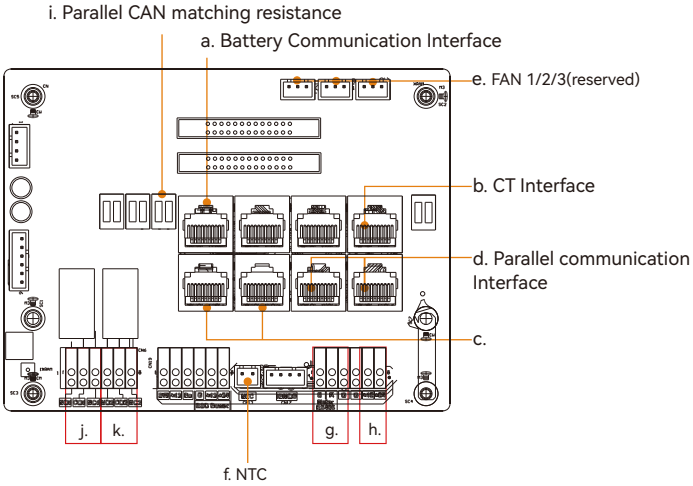

a). Battery communication port (CAN&RS485) please check Chapter
3.5.2 for Pin definition
b). CT Interface: please check Chapter 3.6.4 for CT connection
c). Reserved for connecting meter socket
d). Parallel communication port please check Chapter 3.9 for Parallel
connection
e). FAN 1/2/3(reserved)
f). NTC: Connection for temperature sensor of lead-acid battery
g). Meter 485B&485A: For Meter communication
h). +12V: Reserved for customer to use, Max 500mA
i). CAN Matching resistance: Set DIP switch when use inverters in parallel
j). GEN(NO, NC): Connection for generator auto-start function
k). DRY(NO, NC): reserved

3.4 PV Connection

The PV connection of this hybrid inverter is the same as that a traditional on-grid solar inverter (string inverter).

Cable Requirement:

Cable Size	Minimum Voltage
10-8AWG(5-8mm²)	600V

WARNING

- Please double check the lowest ambient temperature of the installation location. The rated Voc on solar panel nameplate is obtained at 25℃. As the ambient temperature drops, the Solal panel Voc increases. Please ensure the Maximum solar string voltage corrected at the lowest temperature does not exceed the inverter's maximum input voltage of 550V.

NOTICE

- The inverters have triple MPPTs. For MPPT1 and MPPT2, users can connect two strings. For MPPT3 users can connect one string.
- When users connect 2 strings to MPPT1 and MPPT2, make sure the two strings have the same quantity of solar panels. The inverter will limit the total MPPT1/MPPT2/MPPT3 input current to 26A/26A/15A automatically.
- The inverter will limit the max solar input power to 21kW total.

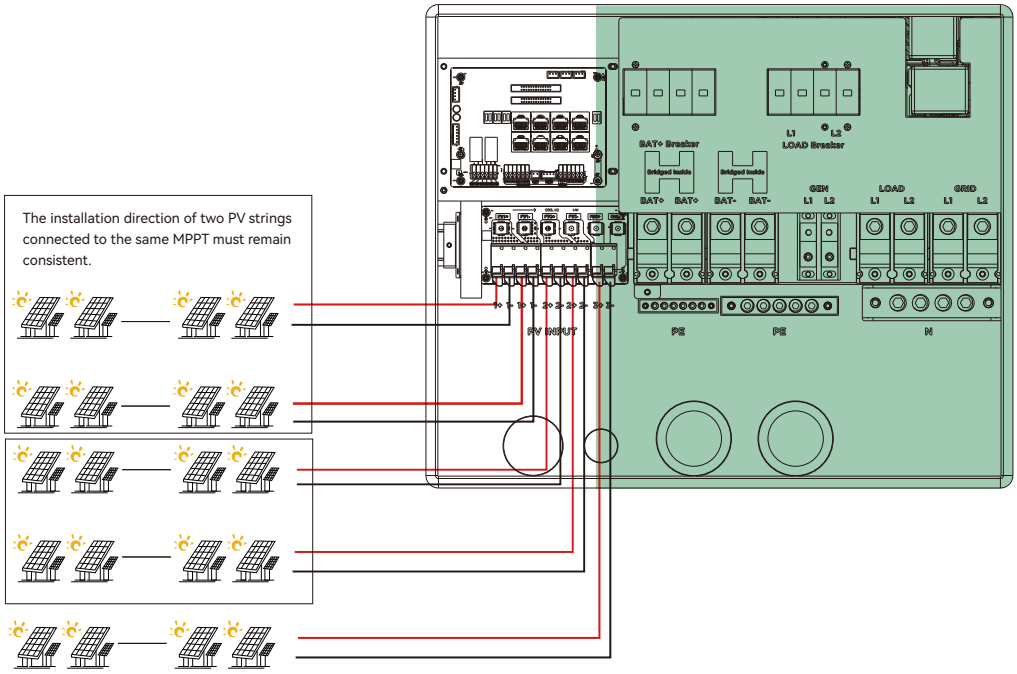

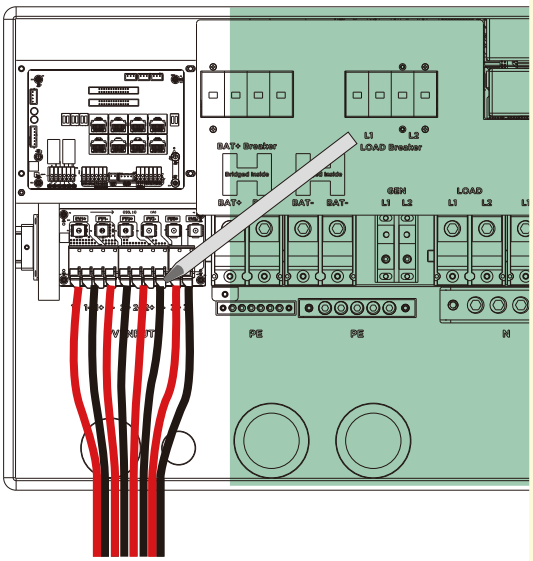

Steps for PV connection

a. Strip off 1/2-2/3 inch(13~17 mm) insulation on the PV string's positive and negative conductors.

b. Use wire ferrules for PV string conductors if they are stranded wire type.

c. Insert the conduit fitting into the opening for PV connection and tighten it from the inside using the counter nut.

d. Route the PV conductors through the conduit fitting and into the inverter.

e. Secure the cable gland in place.

f. Ensure that the cables are connected correctly and securely. Then take appropriate measures to ensure that the conduit and conduit fittings are fastened reliably, and seal the cable entry holes.

3.5 Battery Connection

3.5.1 Battery power cable connection

Cable Requirement:

Model	Cable Size	Minimum Voltage	Torque for cable connection
GEN-LB-US 9.6K PRO/ 12K PRO/13K PRO/16K	2/0-3/0 AWG(65-85mm²)	600V	9-18(N·m)

Step 1. Strip 3/5~4/5 inch(15-20mm) insulation from the cable end and crimp Tube terminal for the cable ends.

Step 2. Route the battery power cable, connect positive to BAT+, negative to BAT-.

Step 3. Secure the conduit fitting to the enclosure using the counter nut.

Step 4. Fasten the OT rings of battery positive and negative cables to the lugs according to the markings.

Step 5. Fix the cable gland in place.

⚠ WARNING

- Polarity reverse will damage the inverter!
- Put the built-in battery breaker in the off position before connecting or disconnecting batteries.

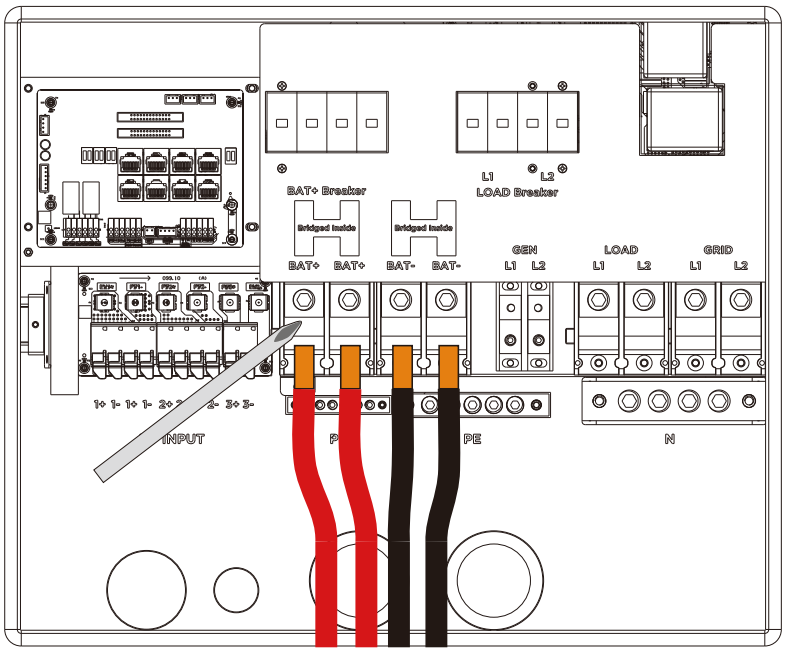

3.5.2 Battery communication cable connection

Correct battery communication cable must be used to connect the battery to the inverter when users choose lithium-ion battery type. Please select 'Lead-acid' type if the lithium battery can not communicate with the inverter. The battery communication port on inverter is an RJ45 socket, Pin for the Rj45 plug of the communication cable is as below. Make the communication cable according to the below inverter Pin and the correct pinout of communication port on battery. The inverter supports both CAN and RS485 communication.

Pin	Description
1	BAT RS485 B
2	BAT RS485 A
3	NC
4	BAT CAN H
5	BAT CAN L
6	NC
7	NC
8	NC

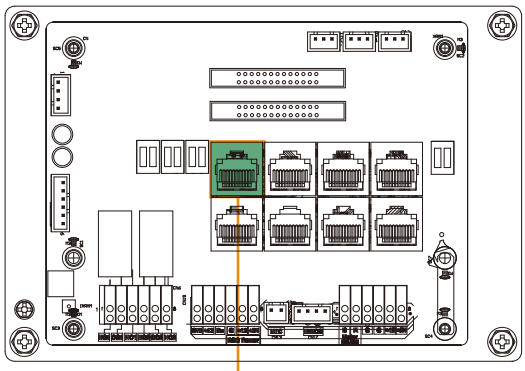

Battery CAN&RS485

After battery power cable and communication cable connection, users need to enter Advanced settings and choose Battery type and brand on the inverter LCD. After you choose the right battery protocol, the communication will be built in 1-2 minutes.

NOTICE

For Lithium-ion battery

- Please make sure the lithium-ion battery to be used is compatible with inverters. Please contact your distributor for an updated battery compatible list.
- If you are using multiple battery modules with the inverter, the inverter communication cable must be connected to the primary battery. Please check with your battery supplier for battery primary and subordinate settings.

  Customers can refer to Annex2 for detail Lithium Brand definition.

For Lead-acid battery

- The temperature sensor for the lead-acid battery is optional. If you need it, please contact the distributor for purchasing.
- There are three stages for lead-acid battery charging. For charging/discharge related parameters, please check the charge/discharge settings page.

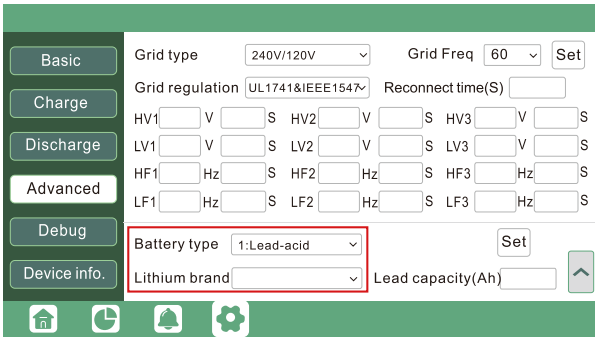

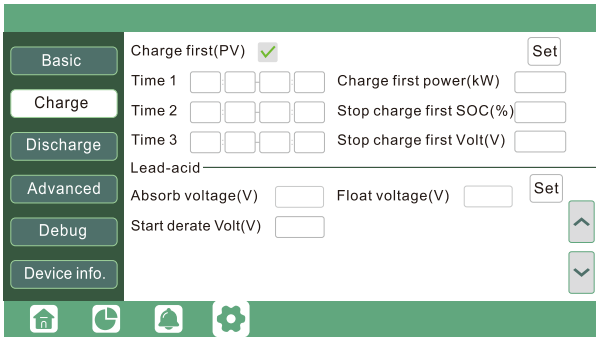

3.6 Grid&EPS load Connection

3.6.1 Grid type and regulation selection

The inverter can be used with 120/240V split-phase,120/208V split-phase.

The inverter has passed the main grid-connection regulations in the US (IEEE1547, CA Rule 21, HECO Rule 14H, etc.). If grid is connected to the Inverter, make sure the grid settings are set correctly. Users can choose different Grid Type and regulation in Advanced program on LCD as below:

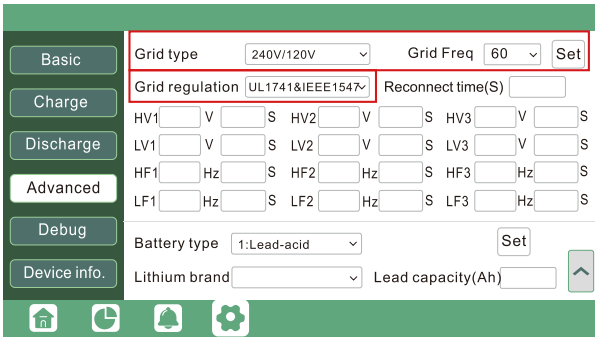

3.6.2 Grid and EPS load connection for split-phase service

Connection diagram for 120/240V is as below. The connection diagram for 120/208V split phase service is roughly the same except that generator is not supported.

The inverter can be connected to the load side of the service disconnecting means if the busbar rating in the main panel can meet the NEC705. 12(B)(3) requirements. Otherwise, a Line side connection can be made to avoid an expensive main panel upgrade.

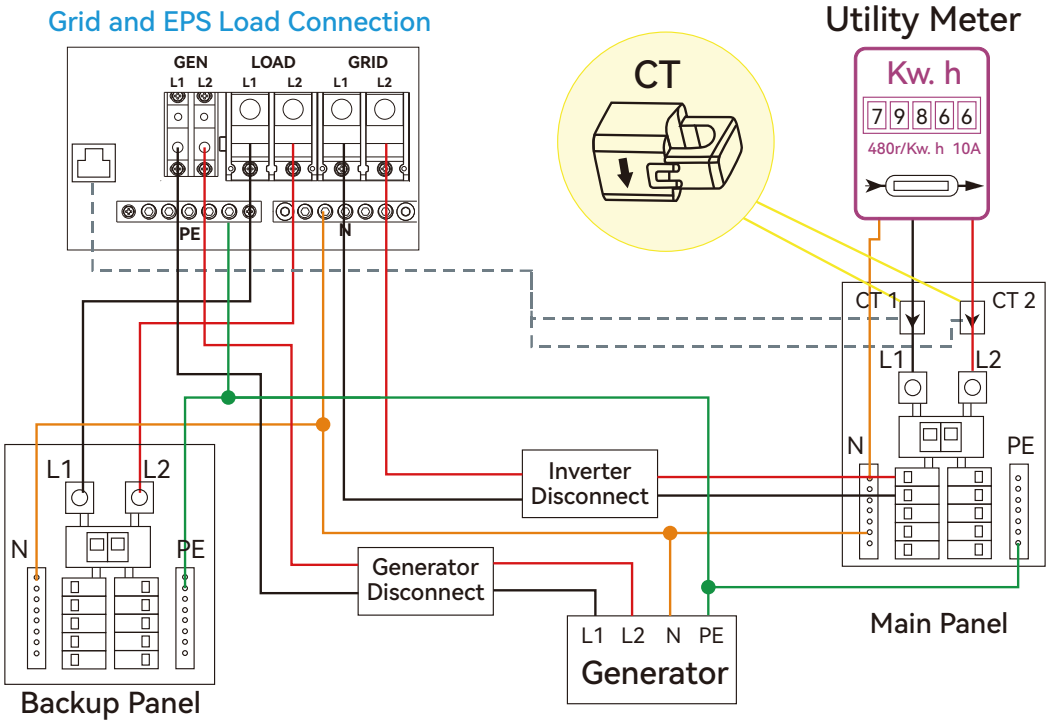

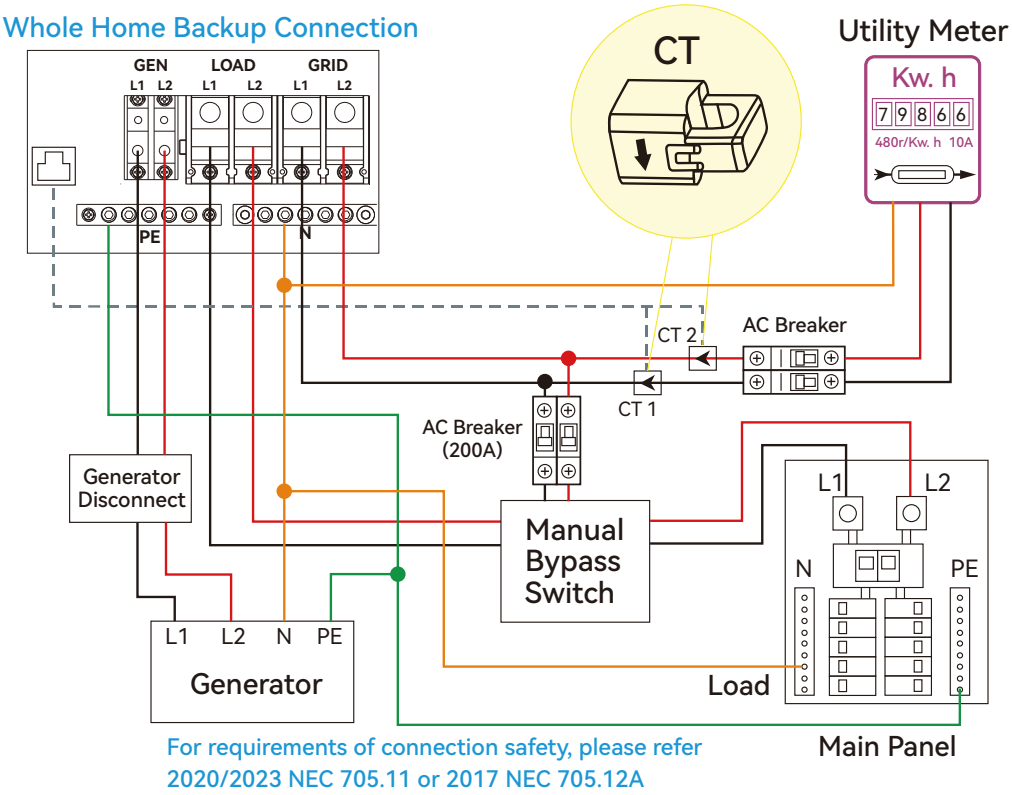

3.6.3 AC cable connection

Cable Requirement:

Current	Cross-section	Cable Diameter	Minimum Voltage	Torque for cable connection
100A	3-0 AWG(25-35mm²)	6-7mm	600V	5(N·m)
200A	3/0 AWG(85mm²)	10.4mm	600V	18(N·m)

a. Strip off 2/5~3/5 inch (10~15 mm) insulation sleeve on the cables.
b. Use wire ferrules if the cables are made of fine stranded wires.
c. Secure the conduit fitting to the enclosure using the counter nut of the fitting.
d. Fasten the grid and EPS load cables to the terminal block in accordance with the markings.
e. Secure conduit to the conduit fitting.
f. Check that the cables are connected correctly and securely, then take appropriate measures to ensure that the conduit and conduit fitting are secured reliably, and seal the cable entry holes.

The Load port wire must be sized to the breaker (OCPD) of the circuit.
a. to the inverter's 200A Load Breaker
b. or if the backup panel has a main breaker, sized to that breaker's amps.
c. or for paralleled multiple inverter configurations,there should be a load-side inverter combiner panel and the wire sized to its breaker's amps.

⚠ WARNING

- Put the built-in load breaker in the on position before providing power to EPS load.

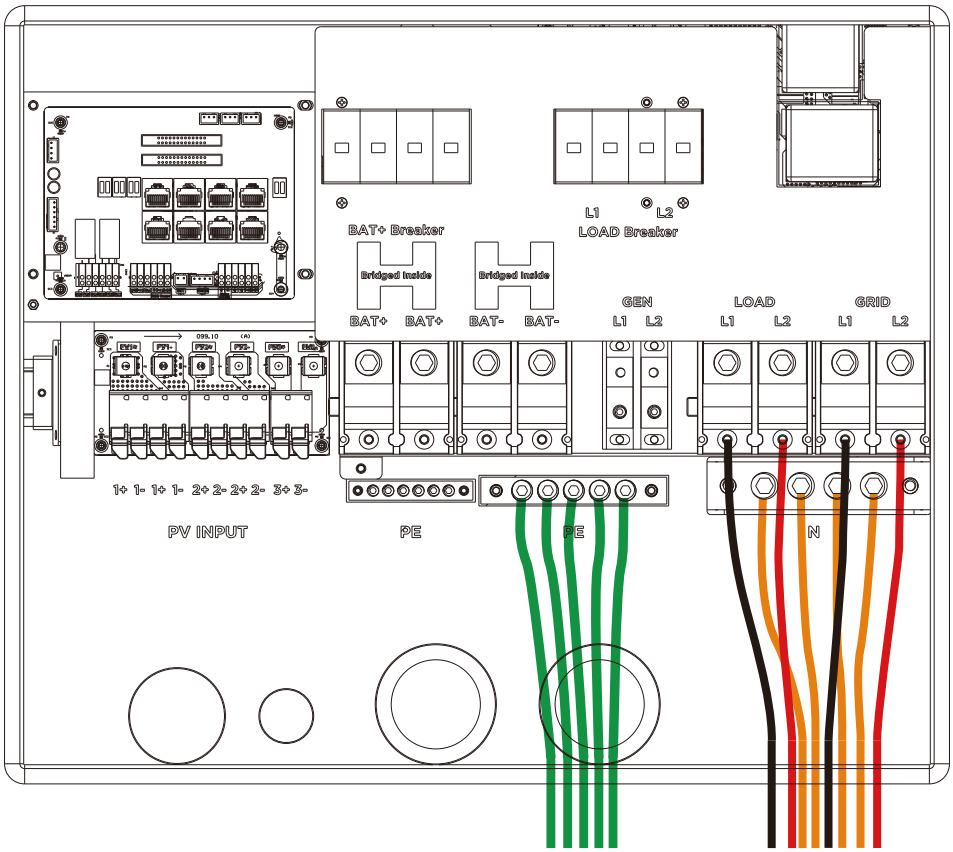

3.6.4 CT/Meter Connection

To measure the power imported from and exported to the grid, a pair of CTs or one triphase meter must be installed at the service entry point in or near the main service panel. We standardly supply 2 CT for one inverter.

CT Port Pin definition

The CT interface for 2 CTs connection is an Rj45 port, we have made an RJ45 plug on those 2 CTs in advance, so you can connect it to the port directly.

Pin	Description
1-4	Reserved
5	CT2N
6	CT2P
7	CT1N
8	CT1P

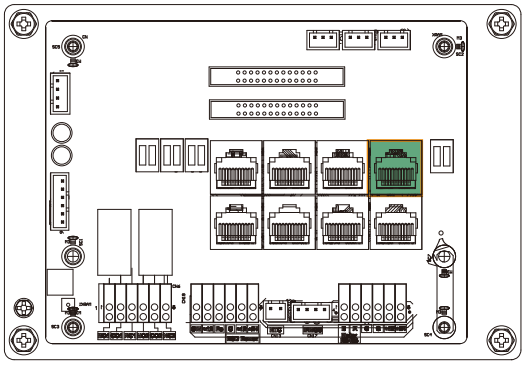

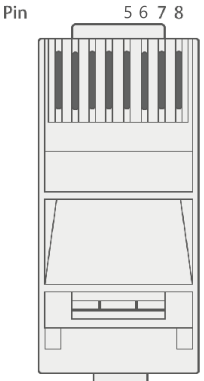

Please refer to the connection diagram for the correct positions of CTs and clamp the 2 CTs on the L1 and L2 wires at the service entry point in the main service panel. CT1 (label L1) should go to L1 and CT2 (label L2) should go to L2. The arrow on the CT is pointing to the inverter. (*** Incorrectly install CT will cause the Display to show incorrect informations and features of the inverter will not function correctly). If the CT are in a wrong direction, there is an option you can change the direction of the CT on your inverter call: CT Direction Reversed (Only for Direction not CT1 or CT2 Placement) in Advanced Tab. You would not need to go change it physically.

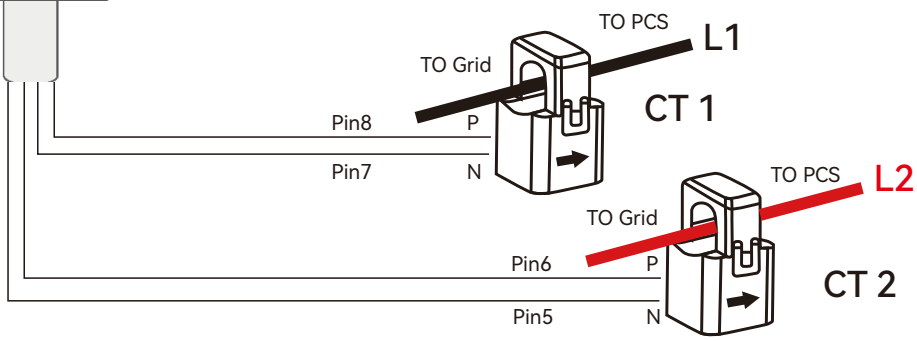

CT Clamp Ratio

The inverter support 3 ratios of CT clamp 1000:1, 2000:1 and 3000:1. The CT ratio of the CTs in the accessory bag is 3000:1. If you are using a 3rd party CT, please ensure the CT ratio is one of them, and select the correct CT ratio setting in the inverter monitor page or on the inverter LCD.

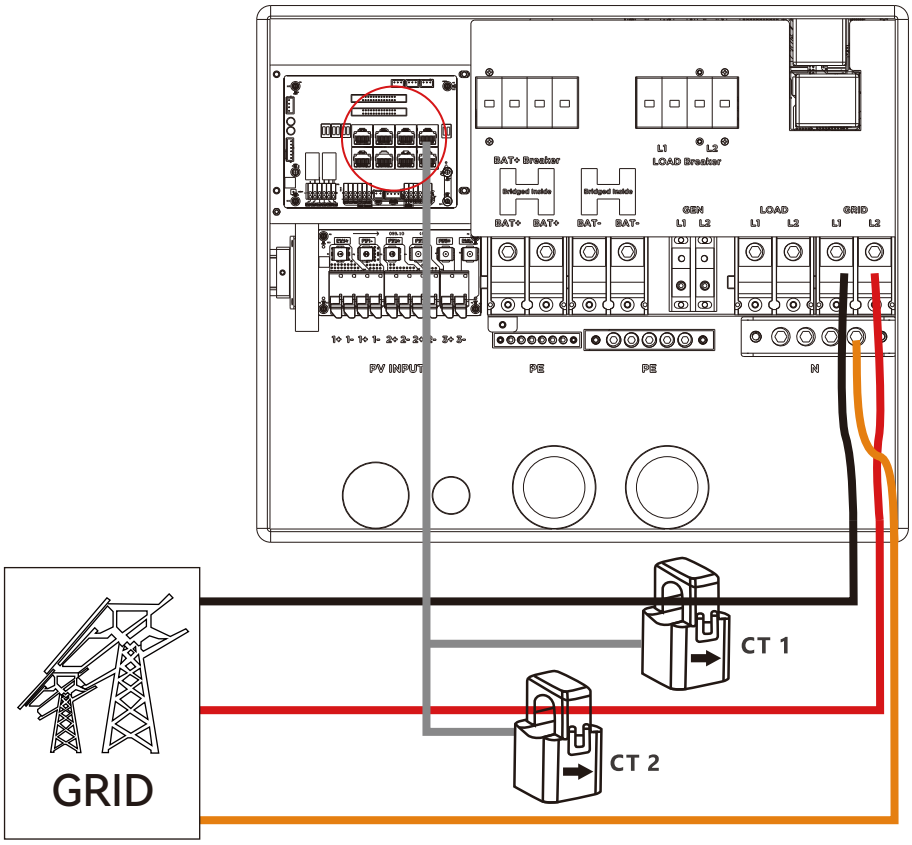

Extend CT clamp cable

The CT wires can be extended with a common ethernet cable if the length is not enough. An RJ45 adapter is needed for the extension. The CT wires can be extended up to 300ft(around 100m).

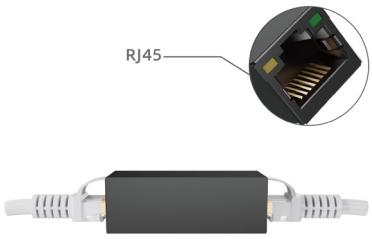

Meter Connection

If you need to use a meter for import/export detection instead of CTs, you need to connect it to the Meter 485A and 485B terminals on the inverter.

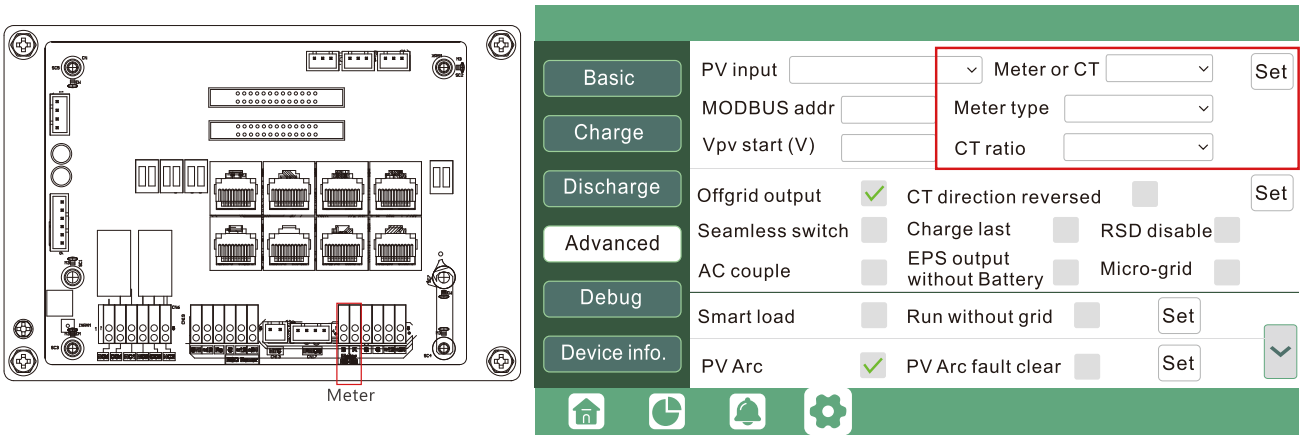

3.7 Working with Generator

3.7.1 Generator system connection

This hybrid inverter can work with generator. There are Gen ports on the inverter for generator connection.

Generator requirements: the generator should be neutral bonded type, with 240V/208V output at same time, generator capacity should be larger than 10kW.

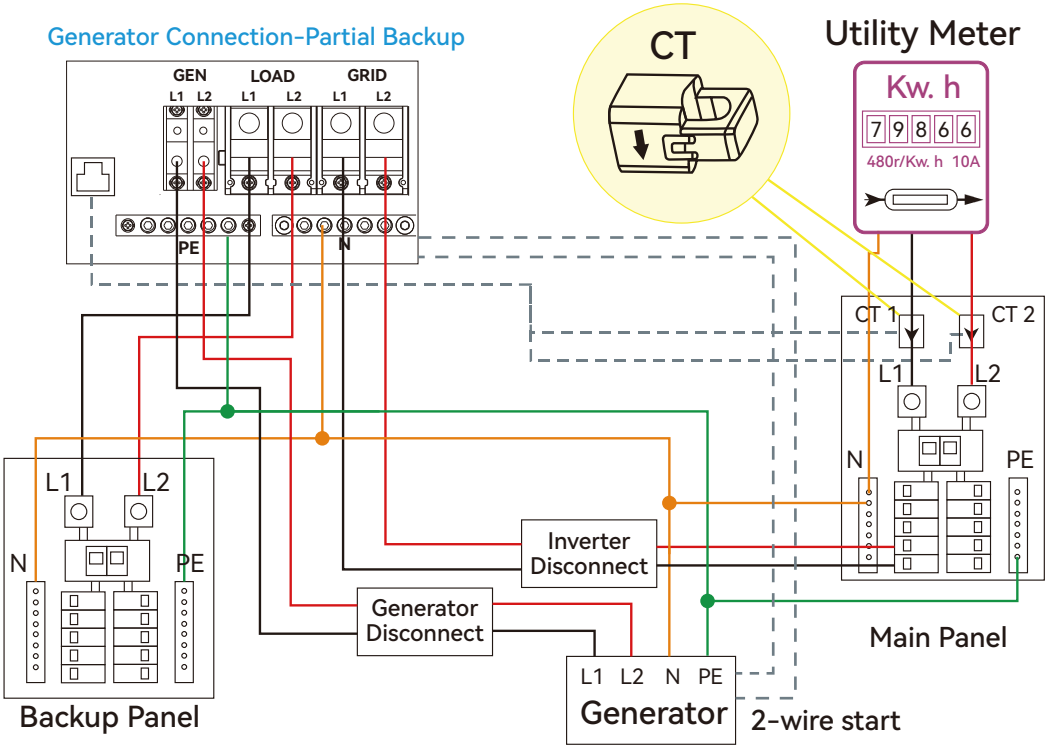

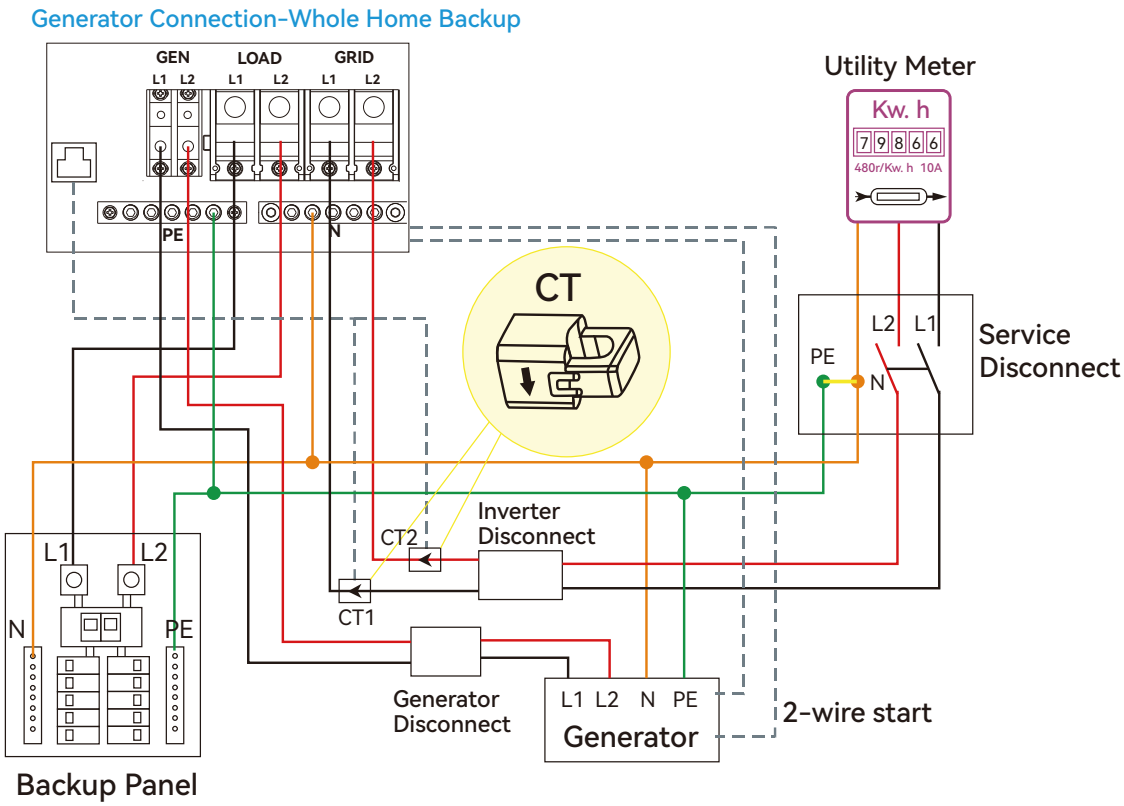

When the generator is started, all the loads connected to EPS Load will be supplied by the generator. Meanwhile the battery will be charged.

When the generator is on, please ensure the total load and charge current will not exceed 80A.

The generator start signal shall be connected to the COM board GEN Nominal Open (NO1 and CO1), or Nominal Close (NC1 and CO1) port, if users want to start generator remotely.

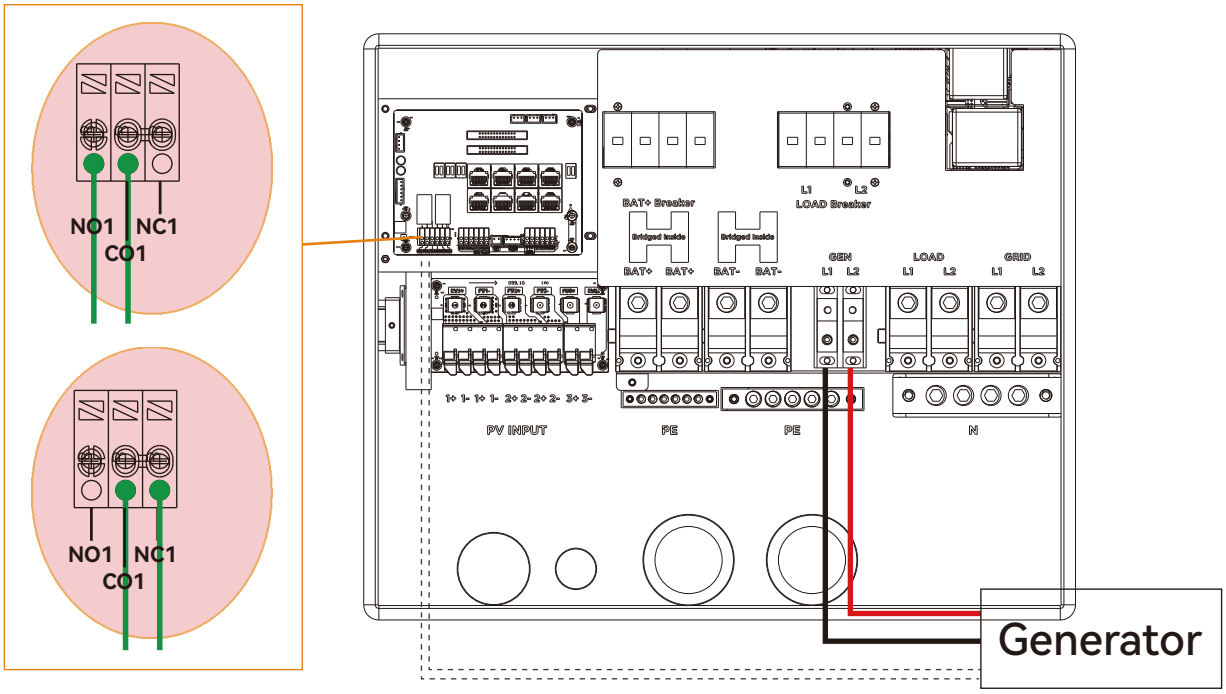

3.7.2 Generator Startup and Stop settings

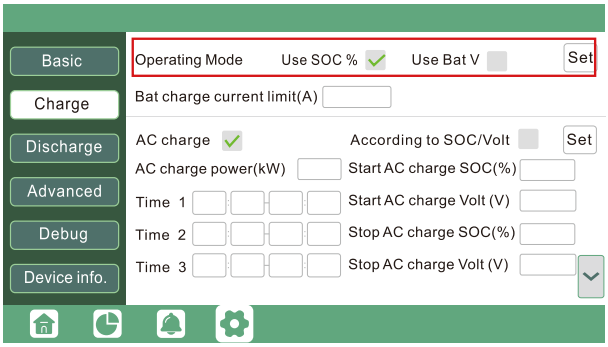

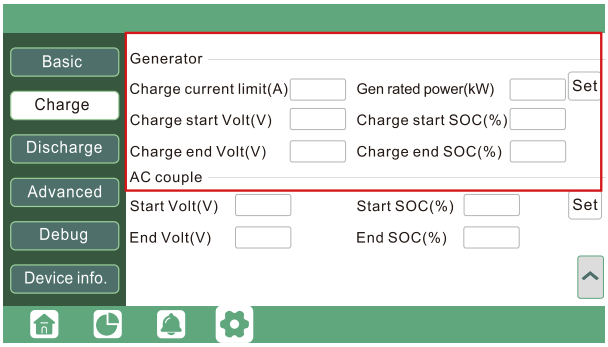

It depends on the Bat operating mode setting, the system will use either battery SOC or battery voltage to determine whether the system needs to start or stop the generator.

Generator Start Conditions

When utility fails and

- When battery is discharged to cut-off settings

or there is force charge request from battery.

or when the battery voltage or SOC is lower than the Generator Charge start Volt/SOC settings.

Generator Stop Conditions

When battery voltage or SOC is higher than Charge end Volt/SOC settings value.

3.8 AC Coupling Installation Connection

The inverter supports AC coupling connection with the existing grid-interactive solar system. The existing solar system is connected to the inverter's GEN port.

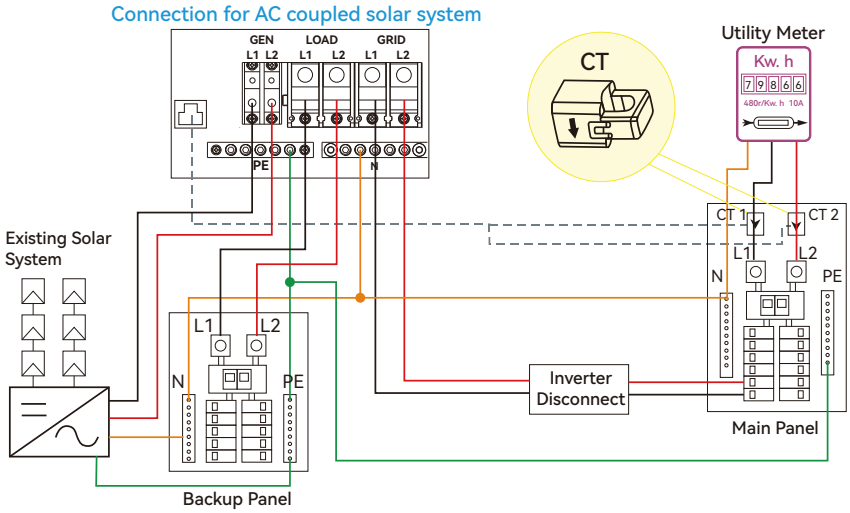

After AC couple function enabled:

When the Grid is on, the GEN terminal is connected to the grid terminal inside the inverter. In this case the hybrid inverter will bypass the interactive inverter AC to the grid and EPS.

When grid is off, the GEN terminal is connected to the EPS terminal inside the inverter. In this case, the loads will be first supplied by solar power. If solar panels are generating more power than load consumption, the excess solar power will be stored to the battery. When solar power exceeds the sum of load power and battery charging power, e.g. when battery is nearly full. The inverter will signal the grid interactive inverter to reduce power via the frequency shifting power reduction mechanism, thus to maintain the balance of generation and consumption of the micro grid system.

AC Coupling Settings

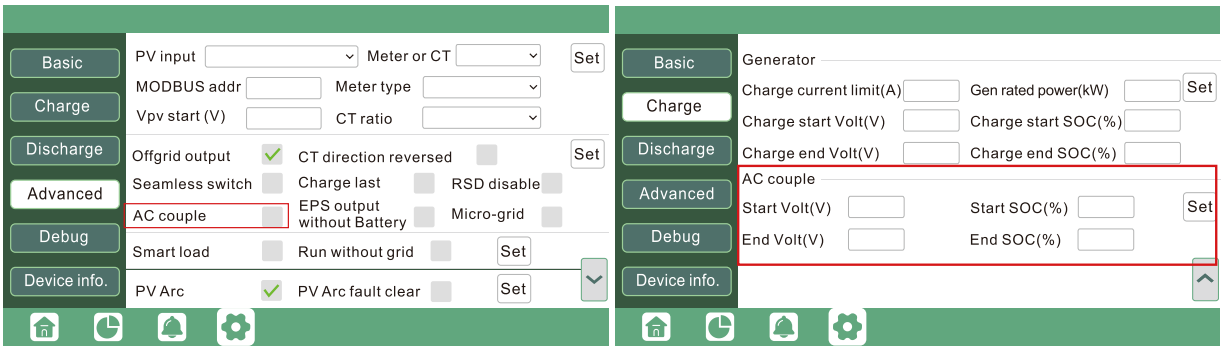

Users need to enable AC coupling function when they connect existing on grid system to GEN terminal.

Start SOC(%): The SOC at which the AC coupled inverters are turned on when in off-grid mode. 50%~70% recommended

End SOC(%): The SOC at which the AC coupled inverters are shut down when in off-grid mode. 90% recommended

When On-Grid and Export to Grid enabled, the Ac-coupled inverter will always be on, and it will sell any extra power back to the grid. Ensure you are allowed to sell power to your utility provider.
When export to Grid is disabled, the AC-coupled inverter will stay at off mode and could not work at on-grid mode to sell power.

3.9 Parallel System Connection

3.9.1 Connection for paralleling system

The hybrid inverter supports parallel connection to expand power and energy capacity to suit different using scenarios. Up to 10 units can be paralleled to reach a capacity of 120kW. Wiring diagram is as below, the manual bypass switch connect loads to EPS panel for default. When inverters fail, users can switch the loads to utility.

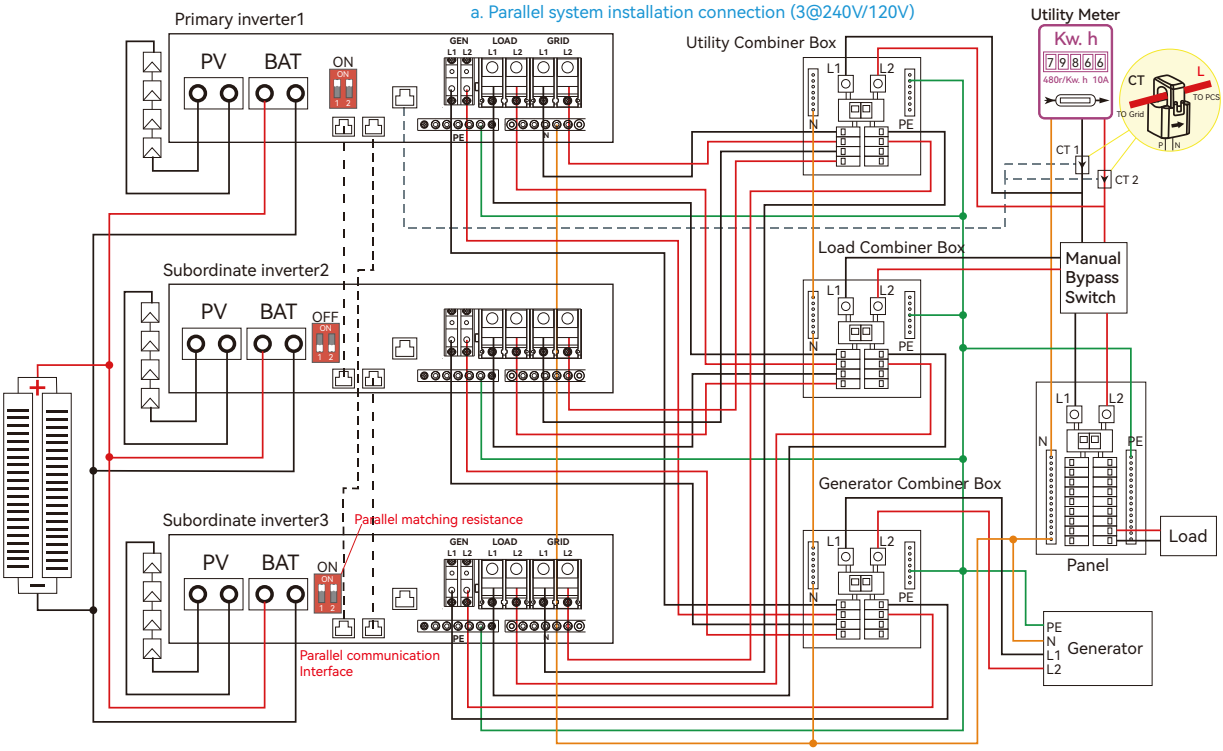

Please put the 2-bit CAN balancing resistor switch to ON status for the first and end inverter of the daisy chain loop.

Grid type setting for each inverter

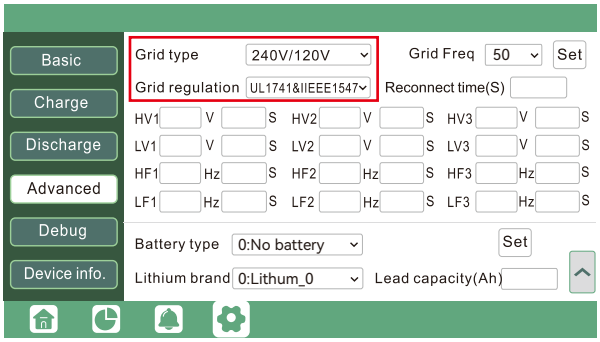

Inv1 setting

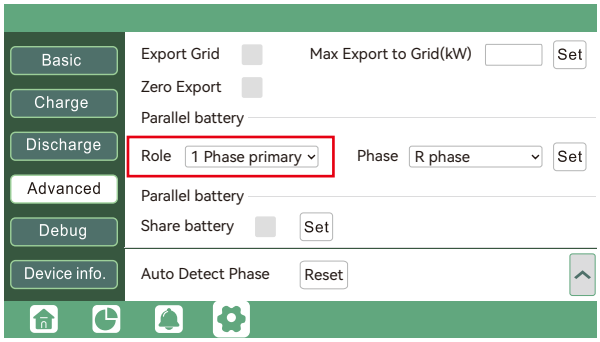

Inv2 setting

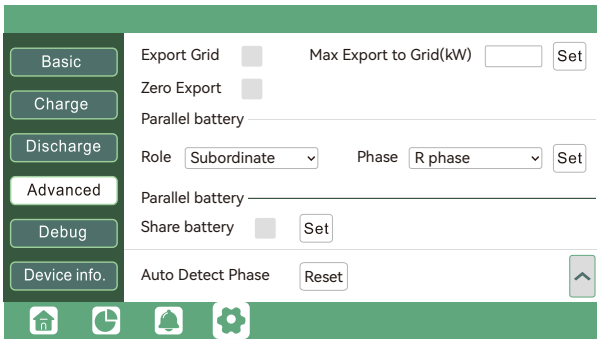

Inv3 setting

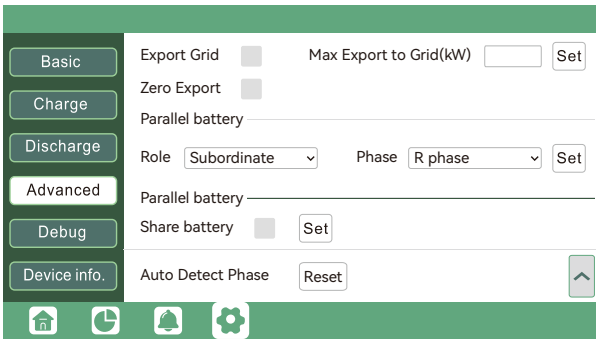

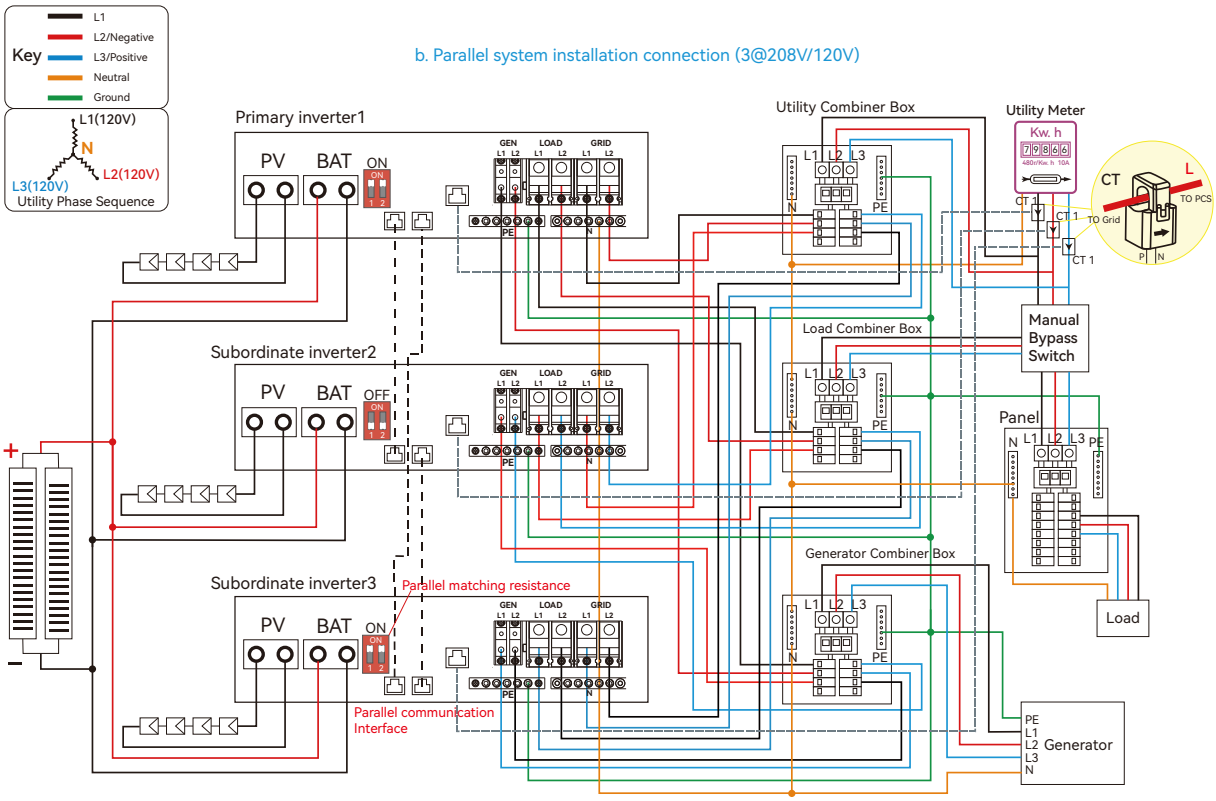

For requirements of connection safety, please refer 2020/2023 NEC 705.11 or 2017 NEC 705.12A

NOTE: For 3@208/120V and 2@208V/120V paralleling system, please contact your inverter supplier for more detailed guidance.

Grid type setting for each inverter

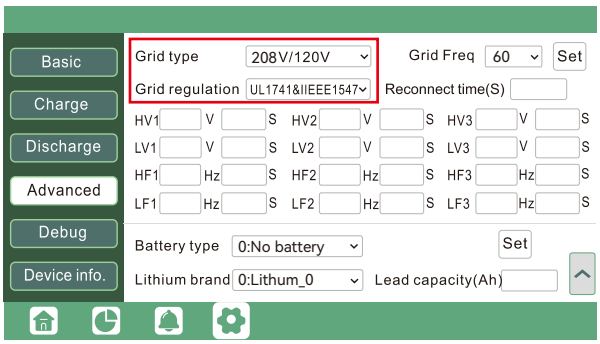

Inv1 setting

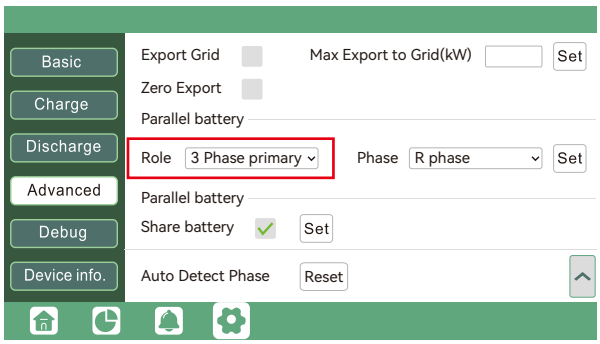

Inv2 setting

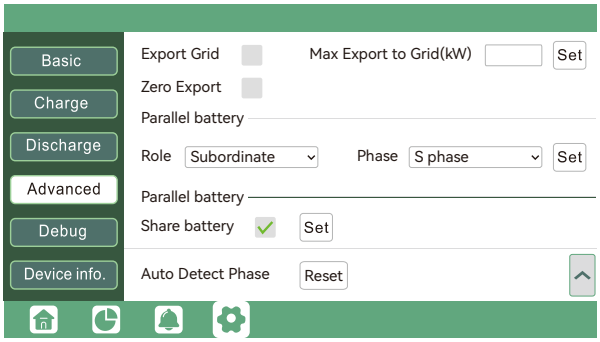

Inv3 setting

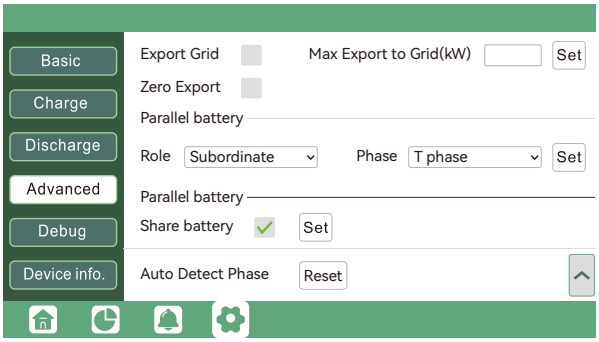

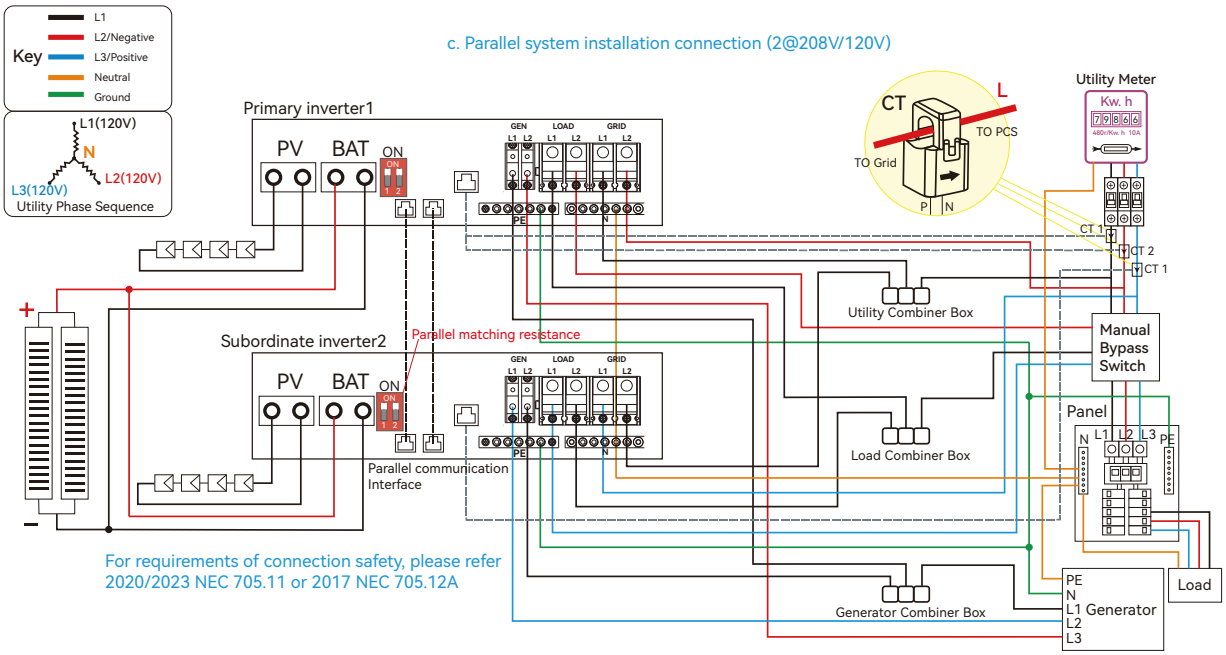

Grid type setting for each inverter

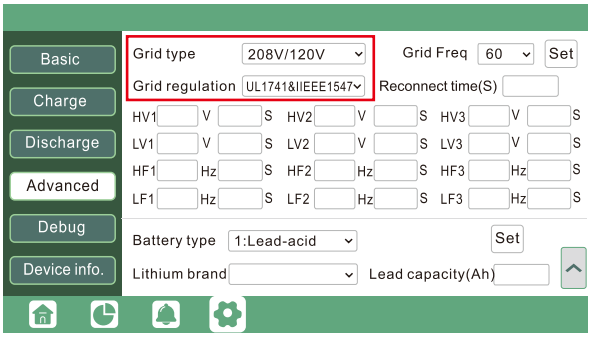

Inv1 setting

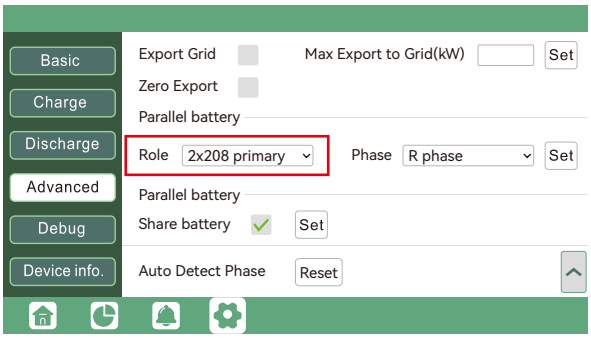

Inv2 setting

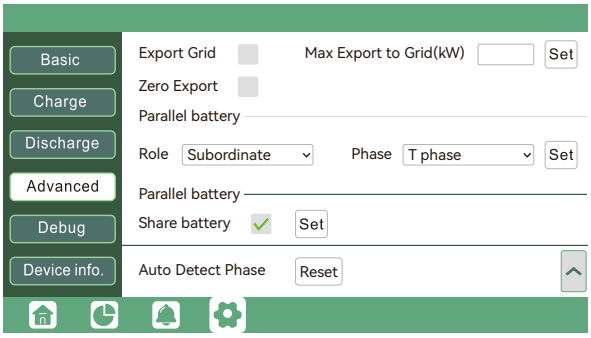

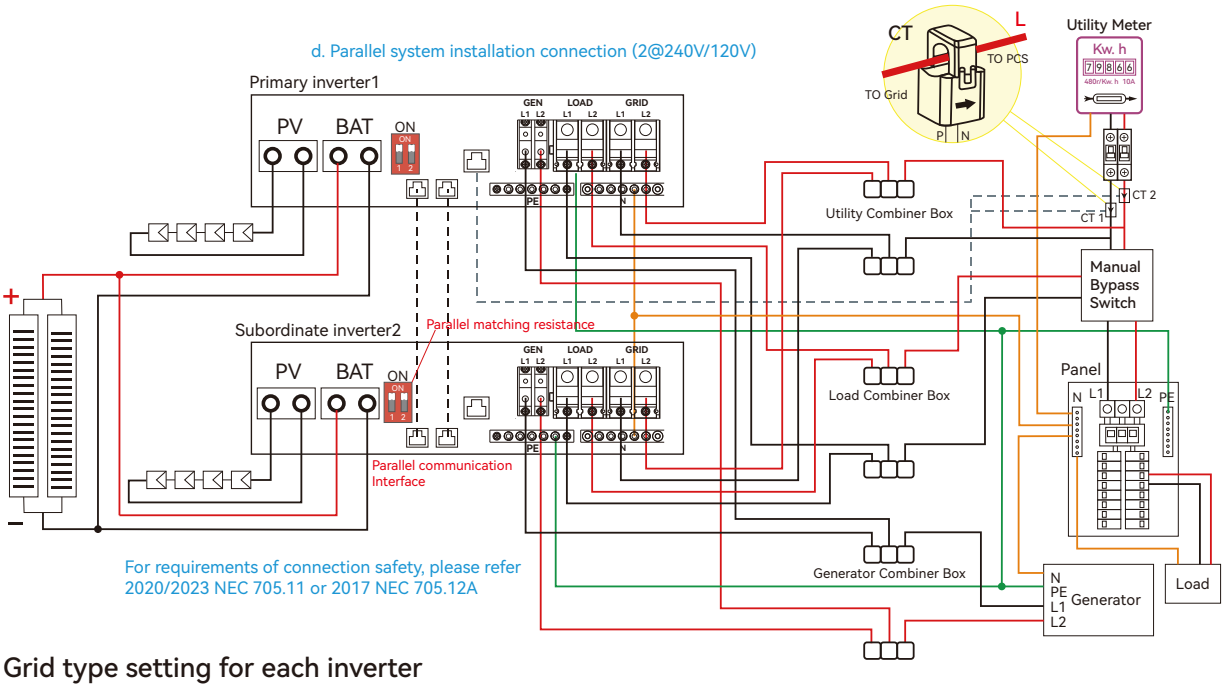

Grid type setting for each inverter

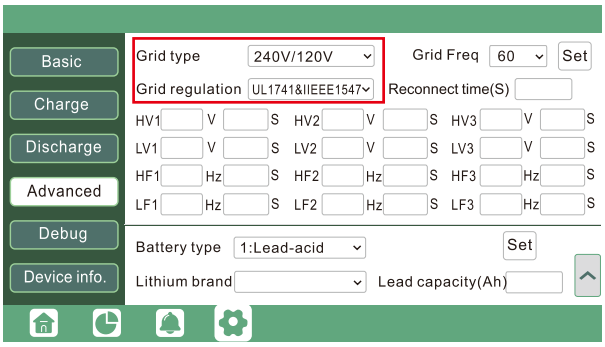

Inv1 setting

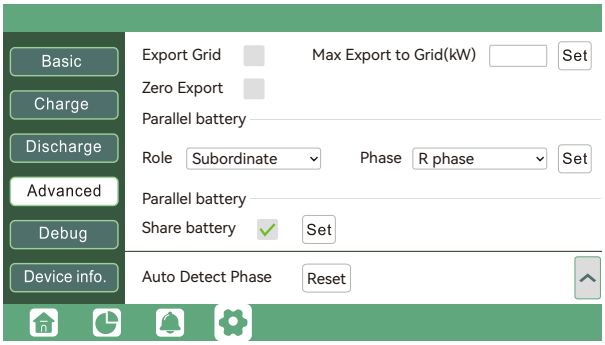

Inv2 setting

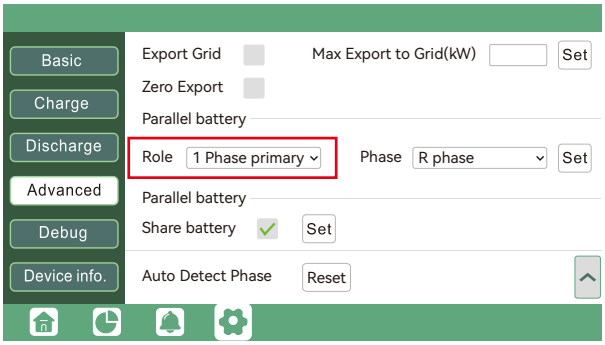

Please put the CAN communication PIN to on status for the first and the end inverter.

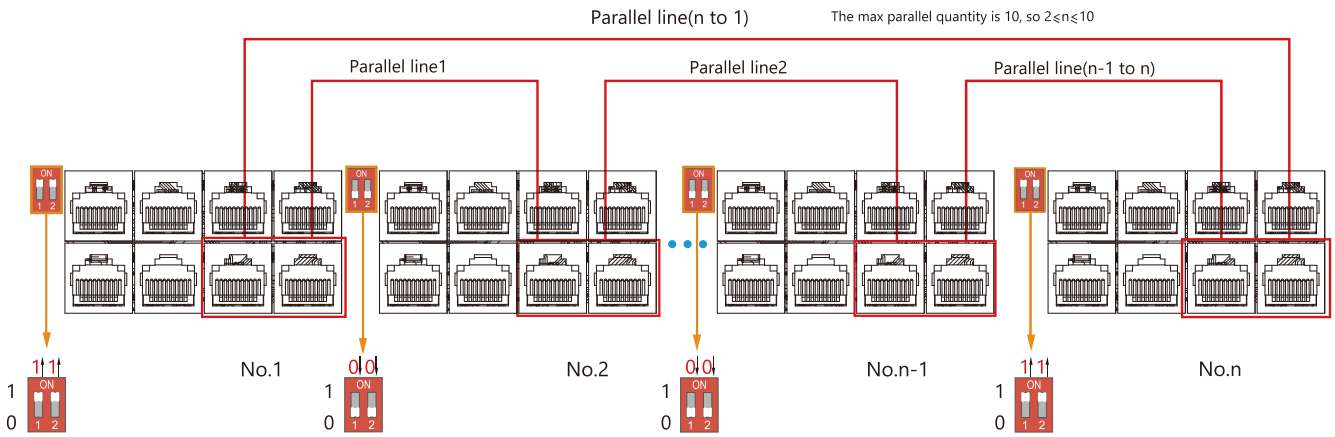

If the parallel cable is not enough or long enough, please make a straight pin to pin cable.

Setting for paralleling function in monitor system

1. Set up monitoring for the system, add all dongles to one station. Users can login to visit the monitoring system, Configuration->Station->Station Management->Add a dongle to add dongles.

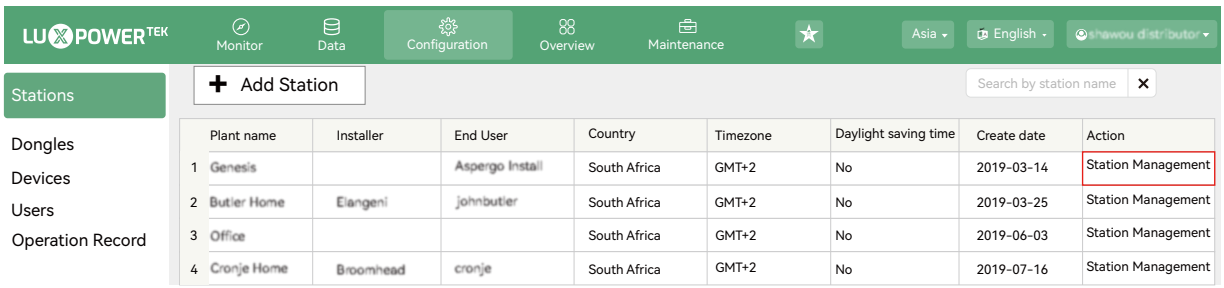

2. If the system shares a single battery bank, enable the shared battery function otherwise disable the shared battery function.

3. Set the system as a parallel group in the monitor system.

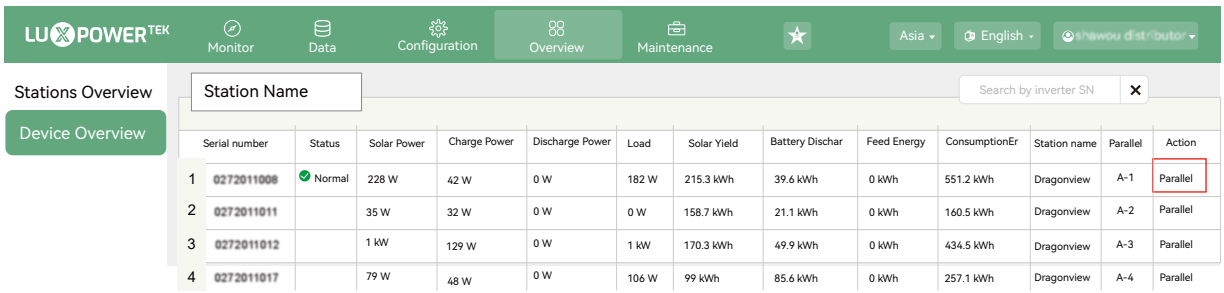

Please contact your inverter supplier for more detailed guidance for paralleling system.

3.9.2 Parallel information display

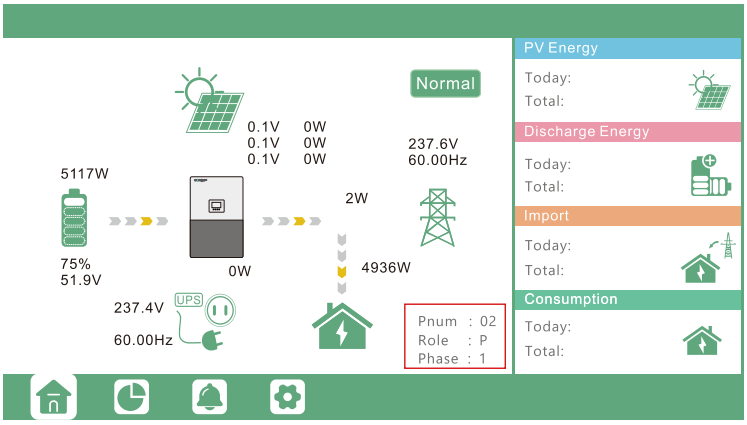

The information in the red box shows the parallel information.
Pnum: 01~10, display number of parallel units
Role: P or S, P means Primary and S means Subordinate
Phaes: 1~3, 1: R Phase, 2: S Phase, 3: T Phase

NOTICE

Notices for parallel system:

- Ensure the Generator is connected to all systems in parallel (if application).
- If you cannot divide the number of PV panels connected to each inverter, it is recommended to have more PV panels in the primary inverter.
- The values shown on the LCD of each inverter represent the inverter's contribution, not the system's total.

3.10 Monitor System Setup

3.10.1 WiFi/GPRS/4G/WLAN dongle connection

Users can use a WiFi/ WLAN /4G /2G dongle to monitor their inverter, and view the monitoring data on a computer or smart phone remotely.
To view data on smart phone, please download APP from the Google Play or Apple APP store, then login with their user account.

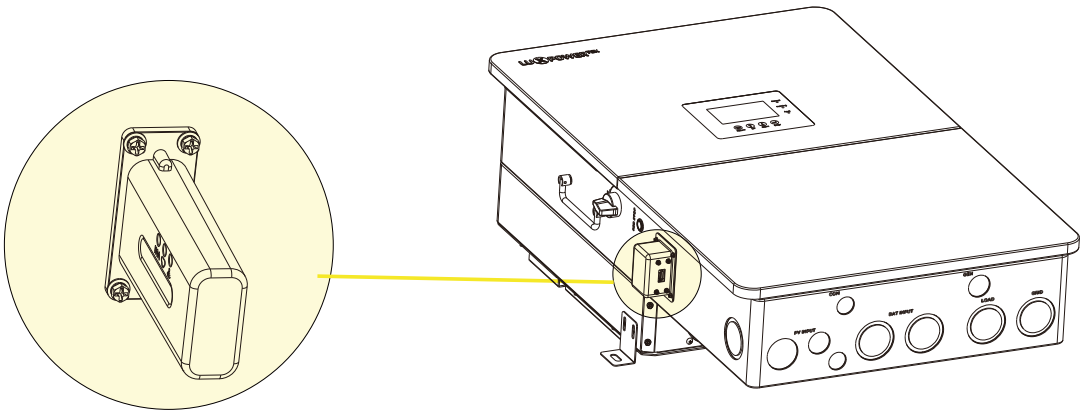

When installing the inverter, make sure that the dongle is connected to the inverter.

3.10.2 Setup the monitor system

1. Create an Account

Account creation depends on the user role:

Installer/Sub-distributor: Please obtain your account credentials from your upstream supplier.

End User: You can register via the mobile app using an Installer Code provided by your supplier.

Alternatively, your supplier can share a registration link for account creation.

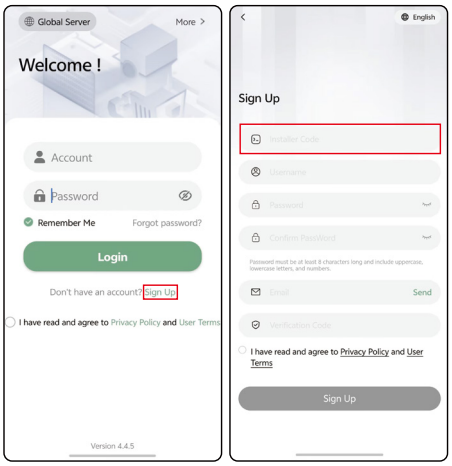

2. Create a Station and Add Dongle

After logging in, create a station first.

Then add the WiFi dongle to the created station.

If multiple stations are required, you can create additional stations as needed.

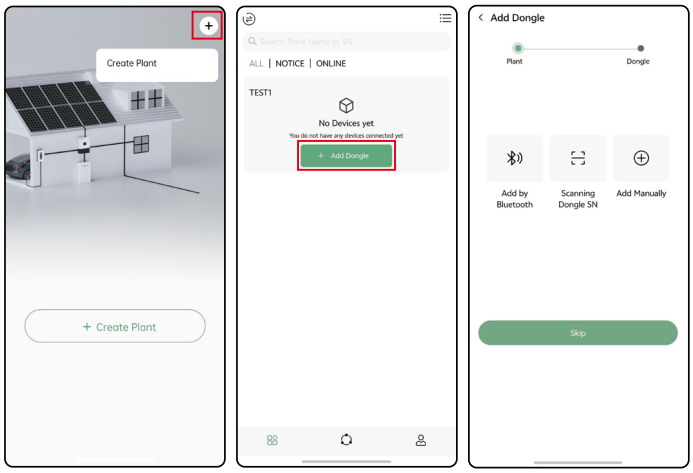

3.10.3 Set homewifi password to dongle

Step 1. Connect your mobile phone to the "DGxxxxxxx" WiFi network ("DGxxxxxxx" is the serial number of the WiFi dongle).

Step 2. Open the app and tap "Dongle Connect".

Step 3. Select the home WiFi network and enter the password. Tap "HomeWiFi Connect". The dongle will restart automatically and connect to the server.

Step 4. Check the LED indicators on the WiFi dongle. The middle LED will remain steady when the connection is successful.

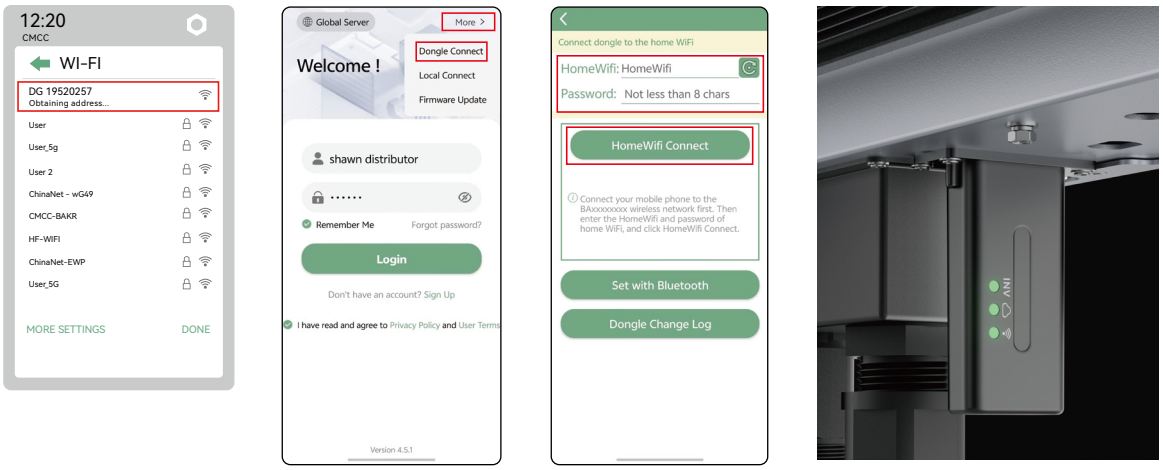

Step 5. Disconnect from the "DGxxxxxxx" network and log in to the app. The inverter will appear online, and remote monitoring will be available.

Additional Information

For more details on WiFi dongle setup and monitoring system configuration, refer to:

1. Wifi Quick Guidance
- Quick setup guide for connecting the WiFi dongle to a local network (also included in the product packaging).
2. Monitoring System Guide
   Includes account registration, parameter settings, and system configuration.
3. Monitoring UI Guide
   Overview of the monitoring interface.

3.10.4 4G dongle monitoring setup

Register an account as described in Section 3.10.2 before setup. Insert a SIM card into the 4G dongle, then plug the dongle into the inverter. After approximately 5 minutes, the inverter will appear online in the monitoring platform.

3.10.5 Third party RS485 communication

Meter 485B&485A: Used when the meter is not connected. These two pins can be used to communicate with the inverter via the RS485 Modbus protocol.

INV485: This interface is shared with the WiFi module. When the WiFi module is not in use, this interface can be used for third-party RS485 communication.
For protocol details, please contact your device supplier.

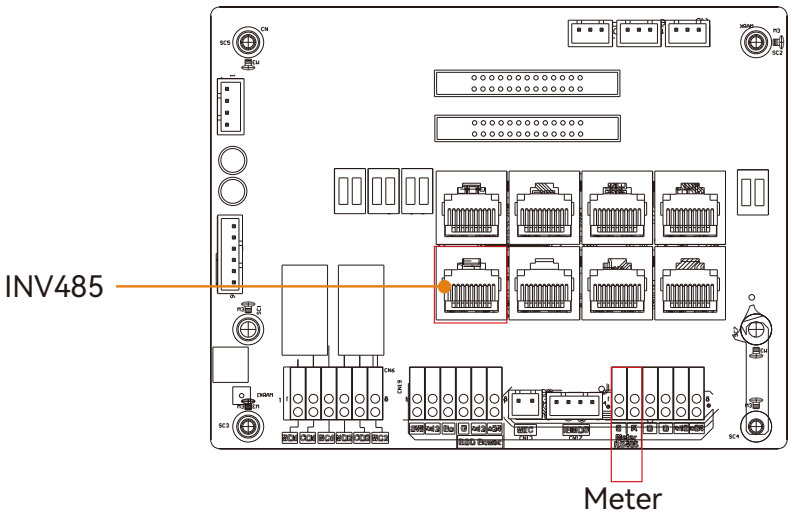

Pin	Description
1	485B
2	485A
3-8	/

4. Operation Guide

4.1 Operation Mode and Function

The inverter has different working modes and functions to meet customers' various demands. The working modes and functions are as below.

4.1.1 Self-usage Mode(Default)

In this mode, the priority order of load supply sources is Solar>Battery> Grid. The priority order of solar power usage is Load> Battery> Grid.

- **Application Scenarios**
  Self consumption mode will increase the self consumption rate of solar power and reduce the energy bill significantly.
- **Related Settings**
  Effective when Charge Priority, AC Charge, and Forced discharge are disabled.
- **Example**

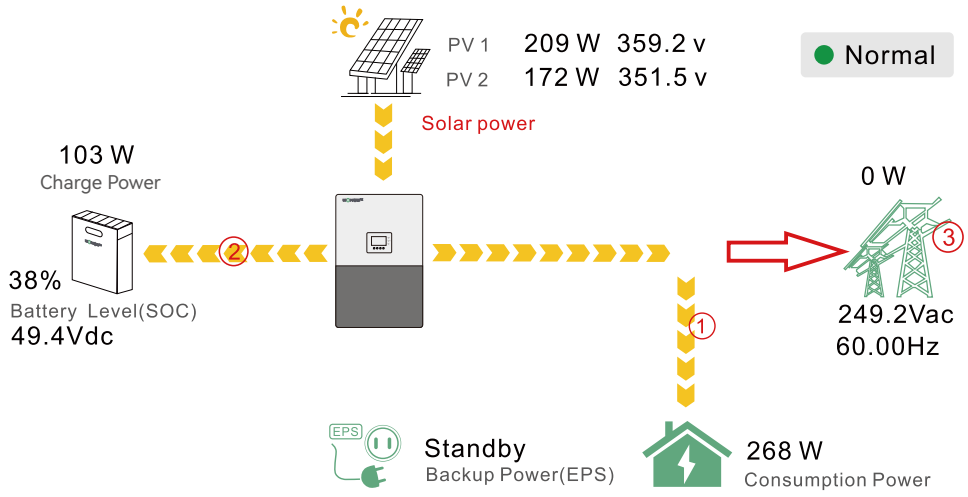

When solar power is enough, solar power will take load, then charge the battery, and at last feedback into the grid (when the feedback function is enabled).

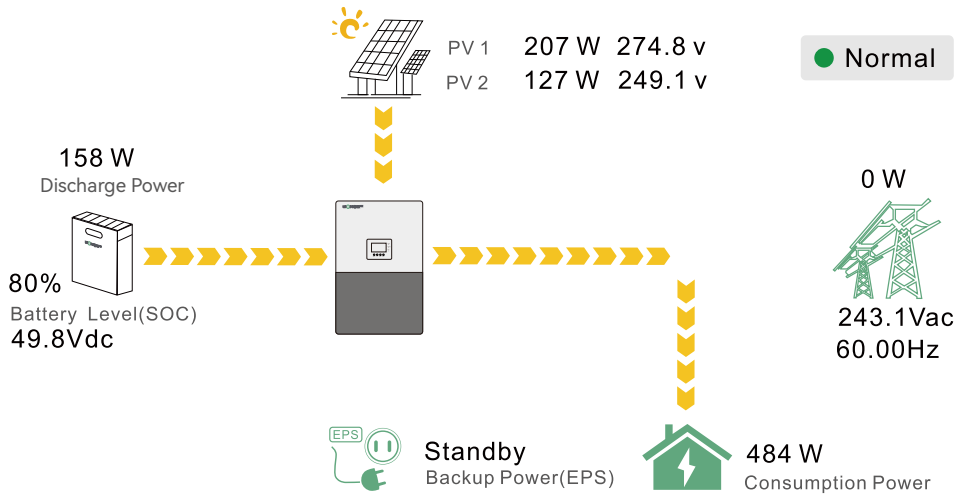

When the solar is not enough to take the load, the solar and battery will take the load together. If the battery is empty, the grid will used to take load.

4.1.2 Charge First Mode

The priority order of solar power usage will be Battery >Load >Grid. During the Charge Priority time period, load is first supplied with grid power. If there is excess solar power after battery charging, the excess solar power will take load together with grid power.

- **Application Scenarios**
  When users want to use solar power to charge batteries, grid power is used to supply loads.
- **Related Settings**

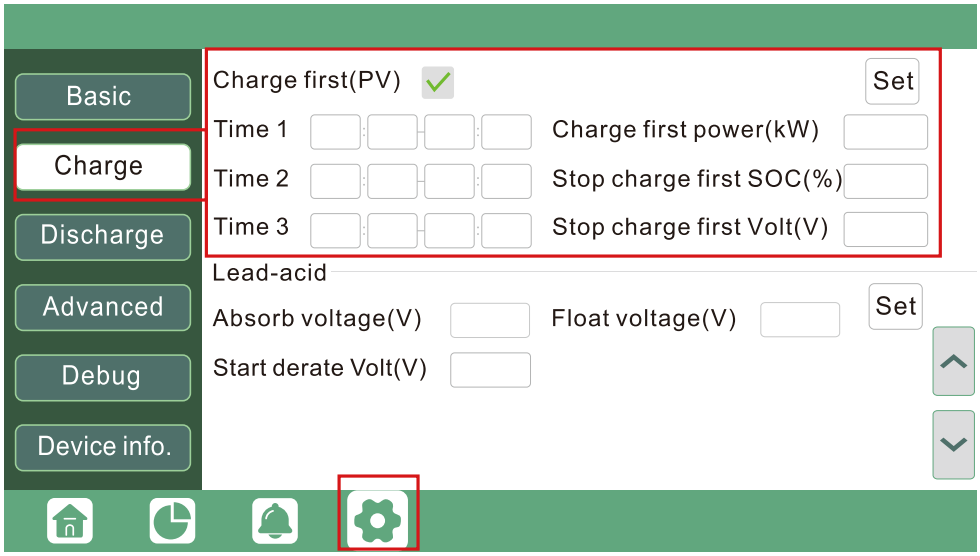

- **Example**

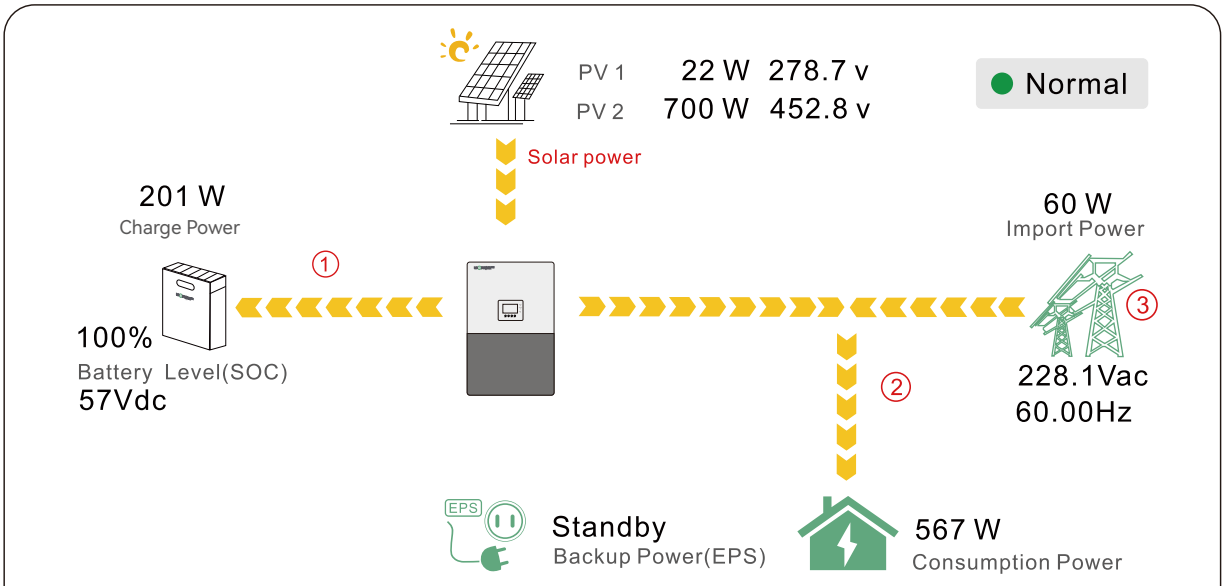

Solar power will be used to charge the battery first, if there is extra power, it will be used to take the load.

4.1.3 AC Charge Mode

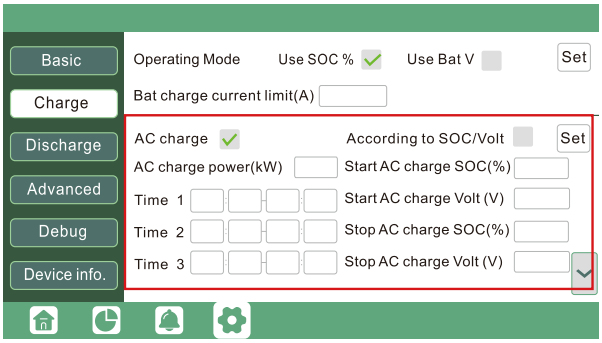

Users can charge batteries with grid power when electricity prices are cheap, and discharge battery power to supply load or export to the grid when electricity prices are high.

- **Application Scenarios**
  When users have a Time of Use (TOU) rate plan.
- **Related Settings**

4.1.4 Grid peak-shaving Function

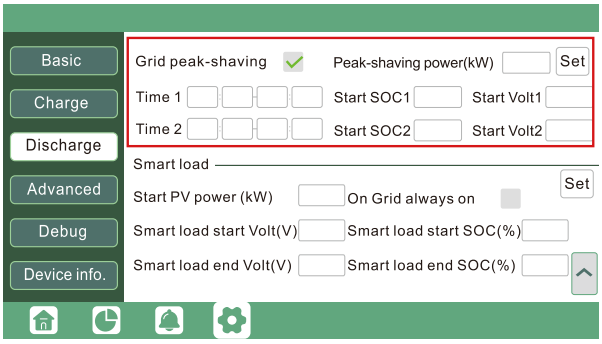

- **Grid peak-shaving 8 Grid peak-shaving power(kW):** Is used to set the maximum power that the inverter wil draw from its grid power. And the Peak-shaving power needs to be set to more than 0.2(kW).

4.1.5 Smart load Function

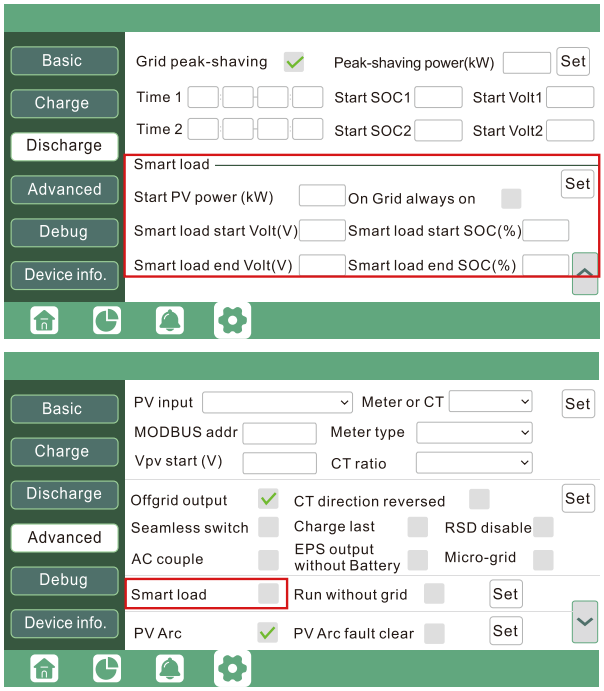

- **Smart Load:** This function is to make the Gen input connection point as an load connection point, if you enable it, inverter will supply power to this load when the battery SOC and PV power is above a user setup value. e.g. Smart load start SOC=90%, Smart load end SOC=85%, Start PV power=300W, it means: When the PV power exceeds 300W, and the battery system SOC gets to 90%, the Smart Load Port will switch on automatically to supply the load which is connected on this side. When the battery reaches SOC<85% or PV power<300w, the Smart Load Port switch off automatically.

Note:
If you enable the Smart load function, it's forbidden to connect the generator at the same time, otherwise the device will be damaged!

4.2 Rapid shutdown

The inverter includes a rapid shutdown system that complies with 2017 and 2020 NEC 690.12 requirements.

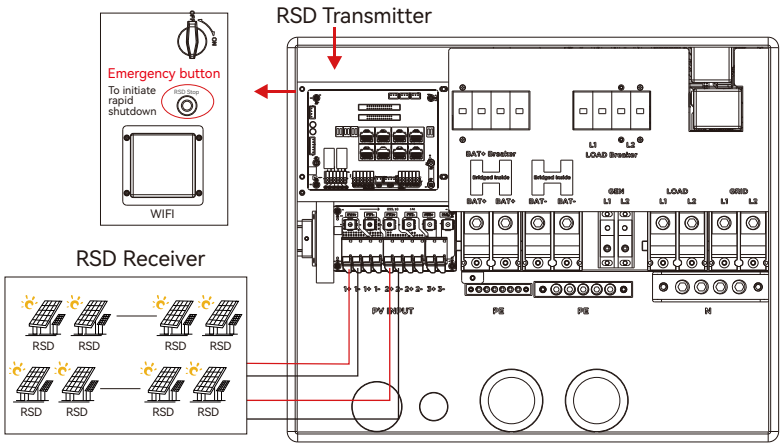

In case of emergency, press the rapid shutdown button that cut off the RSD power supply, thus stopping the inverter AC output, and the PV conductors voltage will be reduced to less than 30V within 30 seconds.

4.3 LCD Display

Users can view inverter running status, real time power, daily and accumulated energy information conveniently on inverter LCD. In addition to the above information, users can also check alarm and fault record on the display for troubleshooting.

4.3.1 Viewing information and alarm/fault record

- **Home Page**
  Touch the screen to light it up if it's in sleep mode. The Home page will appear on the display. Users will see a system overview diagram along with the real time information of each component, such as battery SOC, battery charging/discharging power, grid import/export power, load power, etc. On the right part of the screen, users can check daily and accumulated solar energy, battery charged/discharged energy, grid imported/exported energy, as well as load consumption.

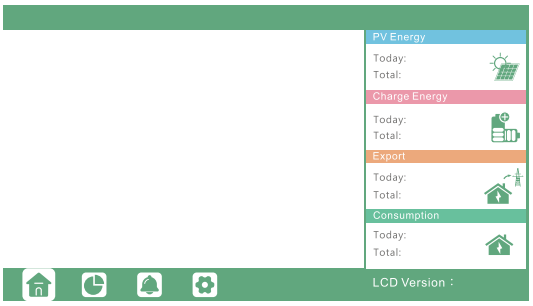

- **Detailed System Information**
  Click on the pie icon at the bottom of the screen and, you'll be able to view the detailed real time solar information, battery information, grid information and EPS output information.

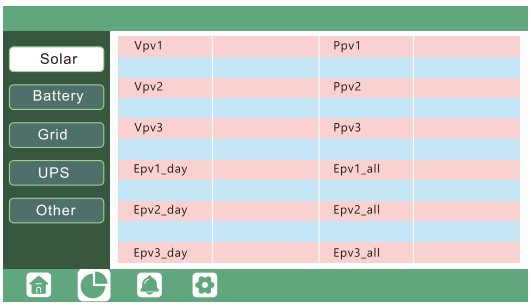

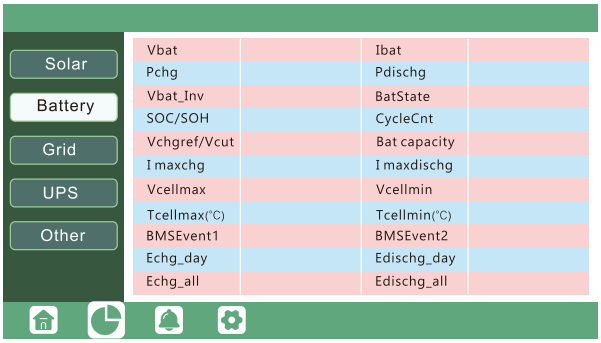

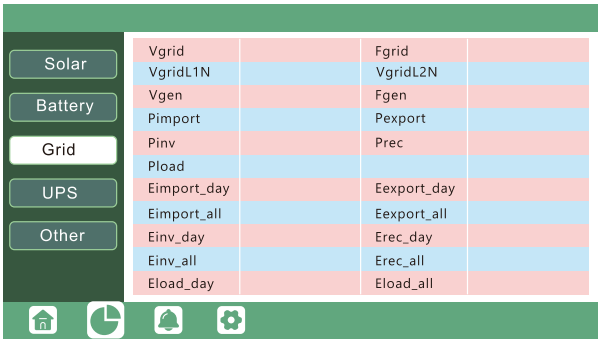

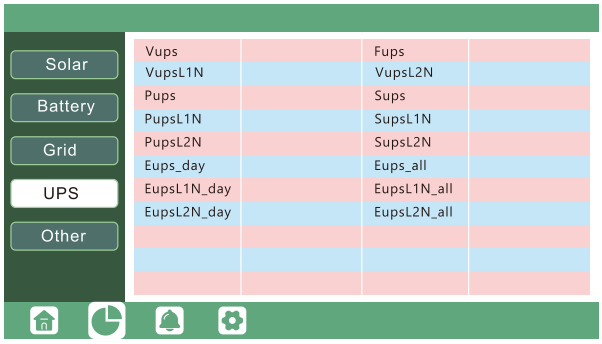

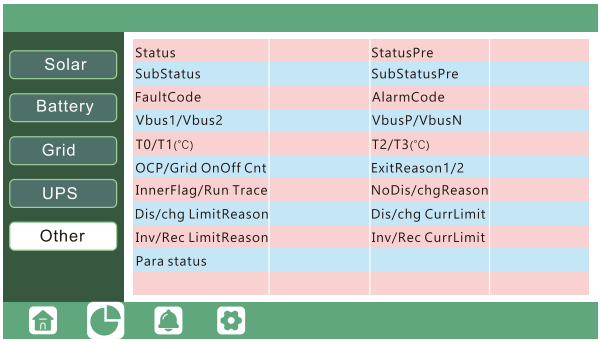

- **Fault/Alarm Information**

  Touching the bell icon at the bottom of the screen,you'll see all the current and historical fault&warning information on this page.

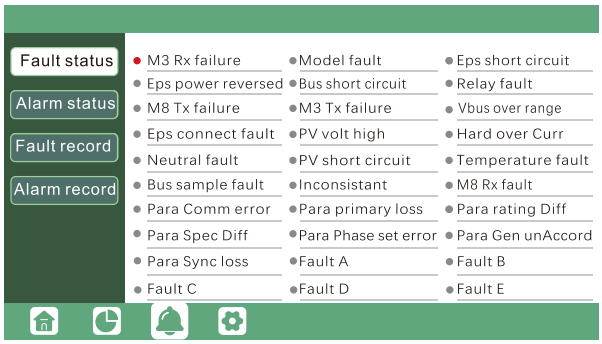

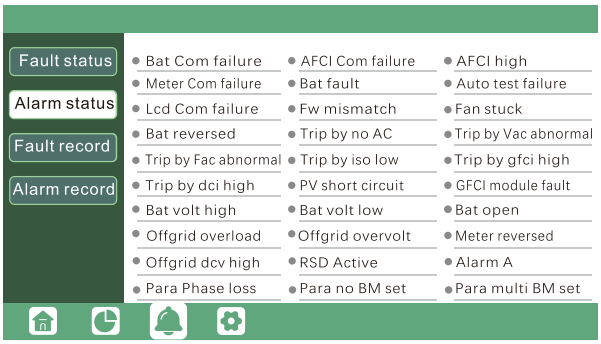

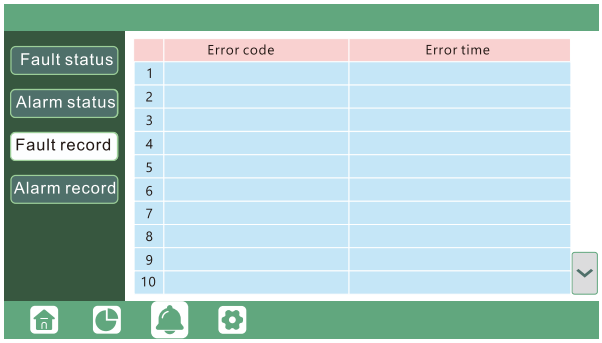

4.3.2 Setting Parameters

Clicking on the gear icon at the bottom of the screen, you'll get into the parameter setting page of the inverter.

a. Basic settings

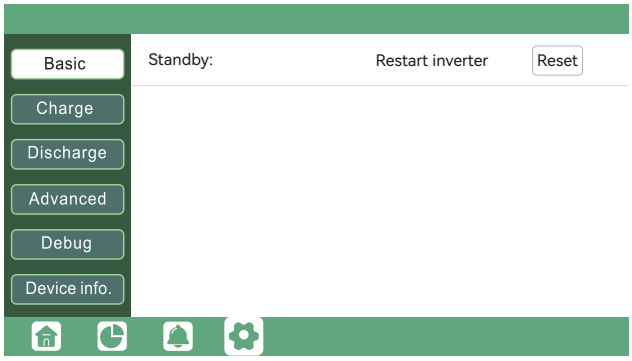

- **Restart inverter:** Restart the system, please note the power maybe interrupted when restarted.
- **Standby:** Is for users to set the inverter to normal status or to standby status. In standby status, the inverter will stop any charging or discharging operations, as well as solar-feed-in.

b. Charge setting

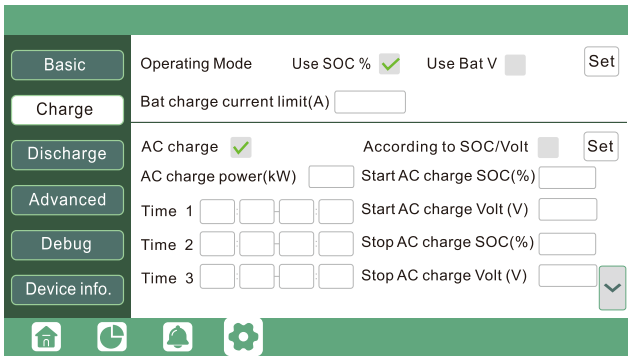

- **Bat charge current limit(A):** Users can set Max. charge current.

- **Operating Mode:** Users can decide to use SOC or BatV to control charge and discharge logic depending on battery type.
- **AC Charge:** Utility charge. configuration If users want to use grid power to charge their battery, then they can enable "AC Charge", set time periods when AC charging can happen, AC Charge power(kW) to limit utility charging power, and "Stop AC Charge SOC(%)" as the target SOC for utility charging. "Stop AC Volt(V)" as the target battery voltage for utility charging.

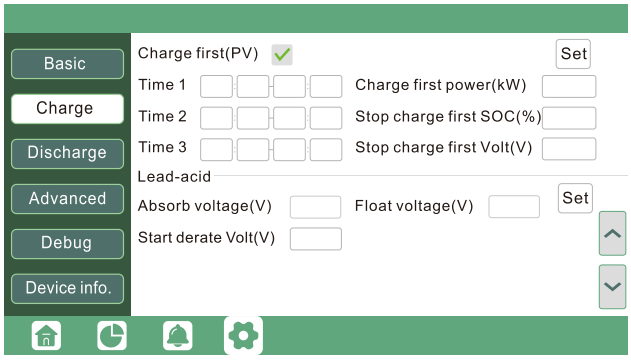

- **Charge first:** PV charge configuration. When using enable Charge first, PV will charge the battery as a priority, set time periods when PV charge can happen, charge first power(kW) to limit PV charge power, and "Charge first SOC(%)" as the target SOC for PV charge first, "Charge first Volt(V)" as the target battery voltage for PV Charge first.
- **Lead acid:** When using Lead-acid battery, you need to set parameters in these programs. Follow the battery manufacturer's recommendation.

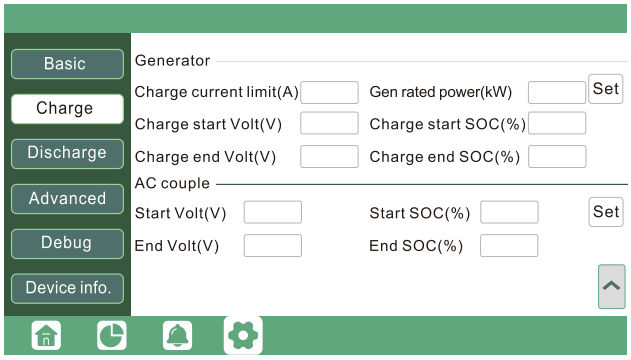

Generator

- **Bat charge current limit(A):** Set the Max. battery charge current from the Generator. The Generator will start charging according to the Charge start Volt /SOC, and stop charging when the battery voltage or SOC reaches the Charge end Volt/SOC value.
- **Gen rated power:** The battery charge power will be limited if the generator input power is greater than the set Gen rated power(kW).

c. Discharge setting

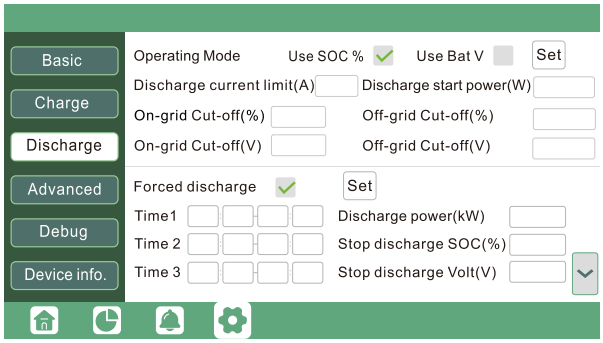

- **On-grid Cut-off(%) and Off-grid Cut-off(%)/On-grid Cut-off(V) and Off-grid Cut-off(V):** End of discharge SOC/Cut off voltage in on-grid and off-grid conditon respectively.

- **Discharge current limit(A):** The Max. discharge current from battery.
- **Discharge start power(W):** The Min. value can be set to 50. When the inverter detects the import power is higher than this value, battery start discharging, otherwise battery will keep standby.
- **Forced discharge:** Settings for battery force discharge within certain time period. In the preset time period, the inverter will discharge battery at the power set by "discharge power", until battury SOC or voltage reaches "Stop discharge" value.
- **Operating Mode**
  You can choose "Use SOC %" or "Use Bat V" to control the battery discharge state.

d. Advanced setting

Advanced setting is mainly by installer after installation.

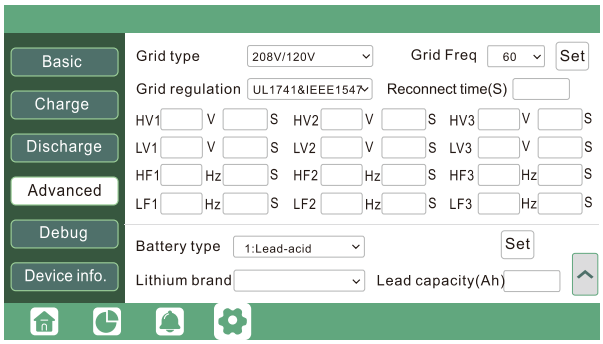

- **Grid type:** You can choose by yourself, 240/120V, 208/120V.
- **Battery type:** No battery, lead-acid or lithium-ion.
- If lead-acid battery is selected, please input correct battery capacity.
- If lithium-ion battery is selected, please choose the battery brand in the Lithium brand drop down list.

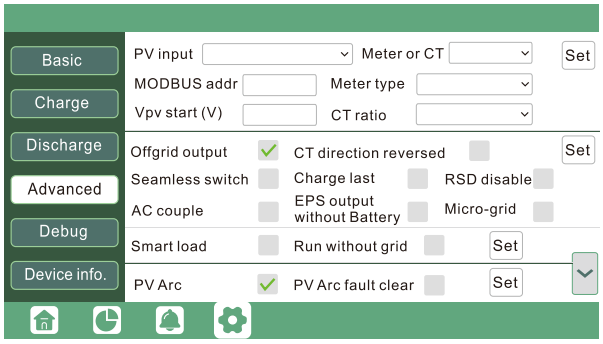

- **CT direction reversed:** If the CTs are in a wrong direction which will cause the display to show incorrect information and features of the inverter will not function correctly, the installer can modify it by selecting it (only for direction not CT 1 or CT 2 placement), there is no need to reconnect the CTs and no need to go change it physically, in the order of loads--grid export--battery charging.
- **Meter type:** Please select it according to the meter that's to be installed.
- **Charge last:** When users want to us solar power in the order of loads--grid export--battery charging.

- **Offgrid output:** It is for users to set if the inverter provides backup power or not when the grid is lost. If users want the load to be seamlessly transferred to the inverter backup power, "Seamless switch" must be enabled. If customers don't have a battery installed yet, but still wish to have inverter backup power with only solar panels connected, "PV Grid Off" can be enabled to use solar power to supply load when the grid fails or load-shedding happens. Micro-grid: only needs to be set when the generator is connected to the inverter's grid port. With this option enabled, the inverter will use AC power to charge the battery and won't export any power through the grid port if AC power is present at the inverter's grid port.

The supported CT ratio is 1000:1, 2000:1, 3000:1, default CT ratio is 3000:1. If 3rd party CT is to be used, please ensure its CT ratio is one of them, and set it accordingly. The battery brand in the Lithium brand drop down list.

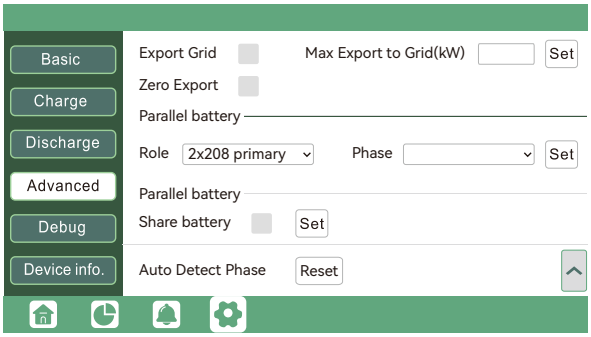

- **Role:** The Role setting of the parallel system. It is set to 1 phase primary by default. In a parallel system, only one inverter is allowed to be set as Primary, and the others are all Subordinate.
- **Phase:** This is the phase code setting of the EPS output. The system will automatically detect the phase sequence of the inverter (consistent with the phase sequence of the connected Grid mains) and display on the inverter after it is connected to the grid.
- **Share battery:** When the inverter is connected as a parallel system, all inverters need to share the battery, and set the "Share Battery" to "Enable" at the same time.
- **Export to Grid:** Is for users to set a zero export function. If exporting solar power is not allowed, users need to disable the "Export to Grid" option. If users' utility meter is tripped with even a little solar export,"Zero export" can be enabled Thus the export detection and adjustment will take place every 20mS, which will effectively avoid any solar power being exported. If export is allowed, users can enable "Export to Grid" and set a maximum allowable export limit in "Max. Export to Grid(kw)".

NOTICE

- All setting of parallel inverters need to be done in Standby or Fault Mode.
- If the system is connected to a lithium battery, the host of the lithium battery needs to communicate with the inverter which is set as Primary in the parallel system.
- Please keep all the setting are same for each inverter in the parallel system on the LCD or Web monitor.

4.4 Start-up and shut down the inverter

4.4.1 Start up the inverter

Step 1. Turn on the battery system firstly, then turn on the built-in battery breaker.

Step 2. Make sure the PV voltage of the strings are higher than 140V, and check if the inverter works in PV charge or PV charge back-up mode.

Step 3. Turn on the built-in load breaker.

Step 4. Make sure step1 to step2 above work properly before turning on the grid power or generator breaker, and check if the inverter can go to bypass mode and on-grid mode normally.

4.4.2 Shut down the inverter

Danger: Do not disconnect the battery, PV and AC input power under load.

If there is emergency issue, and you have to shut down the inverter, please follow the steps as below.

Step 1. Turn off the Grid breaker of the inverter.

Step 2. Switch off the load breaker.

Step 3. Turn off PV breaker and then battery breaker, waiting for the LCD to go off.

5. Troubleshooting&Maintenance

5.1 Regular Maintenance

- **Inverter Maintenance**

  a. Check the inverter every 6 months or 1 year to verify if there are damages on cables, accessories, terminals and the inverter itself.

  b. Check the inverter every 6 months to verify if the operating parameter is normal and there is no abnormal heating or noise from the inverter.

  c. Check the inverter every 6 months to confirm there is nothing that covers the inverter heat sink, if there is, shut-down the inverter and clear the heat sink.

- **Battery Maintenance**

  Follow the manufacturer's requirements on maintenance. When you carry out these works on batteries, please make sure to fully shut-down the inverter for safety consideration.

5.2 LED Displays

LED	Display	Description	Suggestion
Green LED	Solid lit	Working normally	
	Flashing	Firmware upgrading	Wait till upgrading complete
Yellow LED	Solid lit	Warning, inverter working	Need troubleshooting
Red LED	Solid lit	Fault, inverter stop work	Need troubleshooting

5.3 Troubleshooting Based On LCD Displays

Once there is any warning or fault occurring, users can troubleshoot according to the LED status and the warning/fault information on the LCD.

1. Fault on the LCD

If the dot on the left of fault item is red, it means the fault is active. When it is grey, it means the fault is defective.

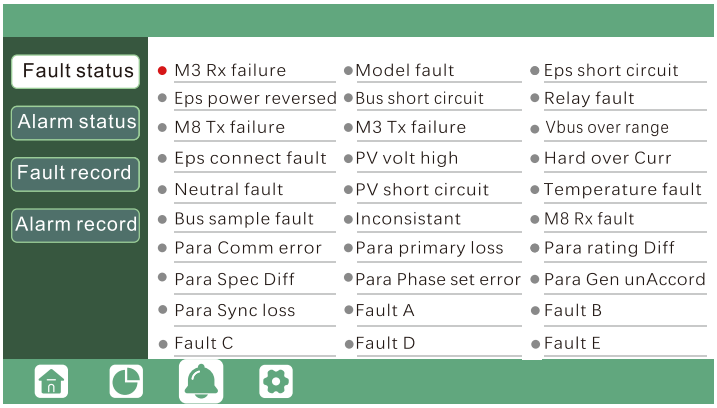

Fault	Meaning	Troubleshooting
M3 Rx failure	M3 microprocessor fails to receive data from DSP	Restart inverter, if the error still exists, contact your supplier.
Model fault	Incorrect model value	
EPS short circuit	Inverter detected short-circuit on EPS output terminals	1. Check if the L1, L2 and N wires are connected correctly at inverter EPS output port; 2. Disconnect the EPS breaker to see if fault remains. If fault persists, contact your supplier.

EPS power reversed	Inverter detected power flowing into EPS port	Restart inverter, if the error still exists, contact your supplier.
Bus short circuit	DC Bus is short circuited	
Relay fault	Relay abnormal	
M8 Tx failure	DSP fails to receive data from M8 microprocessor	
M3 Tx failure	DSP fails to receive data from M3 microprocessor	
Vbus over range	DC Bus voltage too high	Please check if the PV string voltage is within the inverter specification. If string voltage is within range, and this fault still appears, contact your supplier.
EPS connect fault	EPS port and grid port are connected mixed up	Check if the wires on EPS port and grid port are connected correctly. If the error exists, contact your supplier.
PV volt high	PV voltage is too high	Please check if the PV string voltage is within the inverter specification. If string voltage is within range, and this fault still appears, contact your supplier.
Hard over curr	Hardware leval over current protection triggered	Restart inverter, if the error still exists, contact your supplier.
Neutral fault	Voltage between N and PE is greater than 30V	Check if the neutral wire is connected correctly.
PV short circuit	Short circuit detected on PV input	Disconnect all PV strings from the inverter. If the error persists, contact your supplier.
Temperature fault	Heat sink temperature too high	Install the inverter in a place with good ventilation and having no direct sunlight. If the installation site is okay, please check if the NTC connector inside the inverter is loose.
Bus sample fault	Inverter detected DC bus voltage lower than PV input voltage	Restart inverter, if the error still exists, contact your supplier.
Inconsistant	Sampled grid voltage values of DSP and M8 microprocessor are inconsistent	
M8 Rx fault	M8 microprocessor fails to receieve data from DSP	
Para Comm error	Parallel communication abnormal	1. Please check whether the connection of the parallel cable is loose, please connect the parallel cable correcrly. 2. Please check and make sure the PIN status of CAN communication cable from the first to the end inverter rightly.
Para primary loss	No primary in the Parallel system	1. If a primary has been configured in the system, the fault will be automatically removed after the primary works. If so, you can ignore it. 2. If a primary has not been configured in the system, and there are only subordinate in the system, please set the primary first. Note: For single unit running system, the role of the inverter should be set as “1 phase primary”

Para rating Diff	Rated power of parallel inverters are inconsistent	Please confirm that the rated power of all inverters are the same, or you can contact service to confirm.
Para Phase set error	Incorrcet setting of phase in parallel	Please confirm that the wiring of the parallel system is correct first. In this case, then connect each inverter to the grid, the system will automatically detect the phase sequence, and the fault will be automatically resolved after the phase sequence is detected.
Para Gen un Accord	Inconsistent generator connect in parallel	Some inverters are connected to generators, some are not, please confirm that all inverters in parallel are connected to generators together or none of them are connected to generators.
Para sync loss	Parallel inverter fault	Restart inverter, if the error still exists, contact your supplier.

2. Alarm on the LCD

If the dot on the left of fault item is yellow, it means the fault is active. When it is grey, it means the fault is defective.

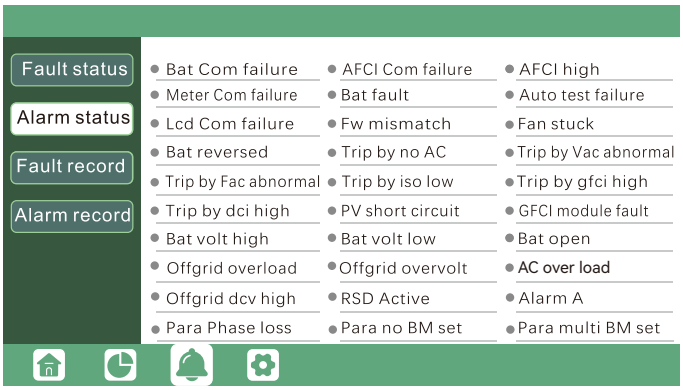

Alarm	Meaning	Troubleshooting
Bat com failure	Inverter fails to communicate with battery	Check if communication cable is correct, and if you have chosen the correct battery brand on inverter LCD. If all is correct but this error persists, please contact your supplier.
AFCI com failure	Inverter fails to communicate with AFCI module	Restart inverter, if the error persists, contact your supplier.
AFCI high	PV arc fault is detected	Check each PV string for correct open circuit voltage and short circuit current. If the PV strings are in good condition, please clear the fault on inverter LCD.
Meter com failure	Inverter fails to communicate with the meter	1. Check if communication cable is connected correctly and in good condition; 2. Restart inverter. If the fault persists, contact your supplier.
Bat Fault	Battery cannot charge or discharge	1. Check the battery communication cable for correct pinout on both inverter and battery end; 2. Check if you have chosen an incorrect battery brand; 3. Check if there is fault on battery's indicator. If there is fault, please contact your battery supplier.

Auto test failure	Auto test failed	Only applied to Italy model.
LCD com failure	LCD fails to communicate with M3 microprocessor	Restart inverter. If fault still exists, contact your supplier.
Fwm mismatch	Firmware version mismatch between the microprocessors	
Fan stuck	Cooling fan(s) are stuck	
Trip by gfci high	Inverter detected leakage current on AC side	1. Check if there is ground fault on grid and load side; 2. Restart inverter. If the fault remains, contact your supplier.
Trip by dci high	Inverter detected high DC injection current on grid port	Restart inverter. If the fault remains, contact your supplier.
PV short circuit	Inverter detected short circuited PV input	1. Check if each PV string is connected correctly; 2. Restart inverter. If the fault remains, contact your supplier.
GFCI module fault	GFCI module is abnormal	Restart inverter. If fault still exists, contact your supplier.
Bat volt high	Battery voltage too high	Check if battery voltage exceeds 59.9V, battery voltage should be within inverter specification.
Bat volt low	Battery voltage too low	Check if battery voltage is under 40V, battery voltage should be within inverter specification.
Bat open	Battery is disconnected from inverter	Check battery breaker or battery fuse.
Offgrid overload	Overload on EPS port	Check if load power on inverter EPS port is within inverter specification.
Offgrid overvolt	EPS voltage is too high	Restart inverter. If fault still exists, contact your supplier.
AC over load	The AC side is overloaded	Reduced the load until the warming disappears.
Offgrid dcv high	High DC voltage component on EPS output when running off-grid	Restart inverter. If fault still exists, contact your supplier.
RSD Active	Rapid shutdown activated	Check if the RSD switch is pressed.
Para phase loss	Phase losing in parallel system	Please confirm that the wiring of the inverter is correct. If the primary is set to 3 Phase primary, the number of parallel inverters needs to be ≥3. (And the grid input of each inverter should be connected with Grid L1, L2, L3 rightly). If the primary is set to 2×208 primary, the number of parallel inverters needs to be ≥2. (And the grid input of each inverter should be connected with Grid L1, L2, L3 rightly)
Para no BM set	Primary isn't set in the parallel system	Please set one of the inverters in the parallel system as the primary.
Para multi BM set	Multiple Primary have been set in the parallel system	There are at least two inverters set as Primary in the parallel system, please keep one Primary and the other set as Subordinate.

5.4 Fan replacement

Please check and clean the fans regularly. The recommended period is 6 months.

Please replace the fan following up the below diagram if there is problem with the fans. Turn off the system and wait for more than 5 minutes before disassembling the machine.

a. Loosen the screws and remove them.

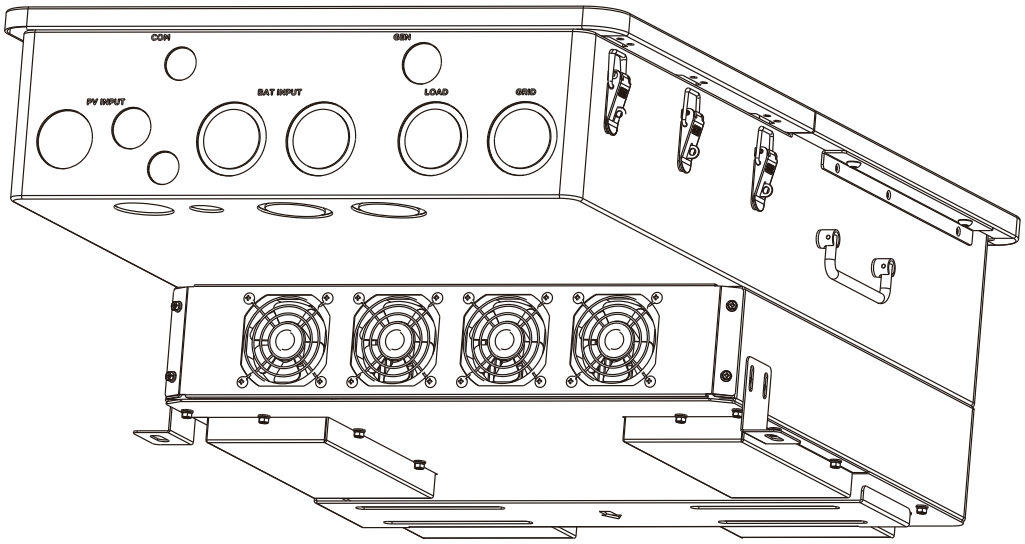

b. Remove the fan fixing.

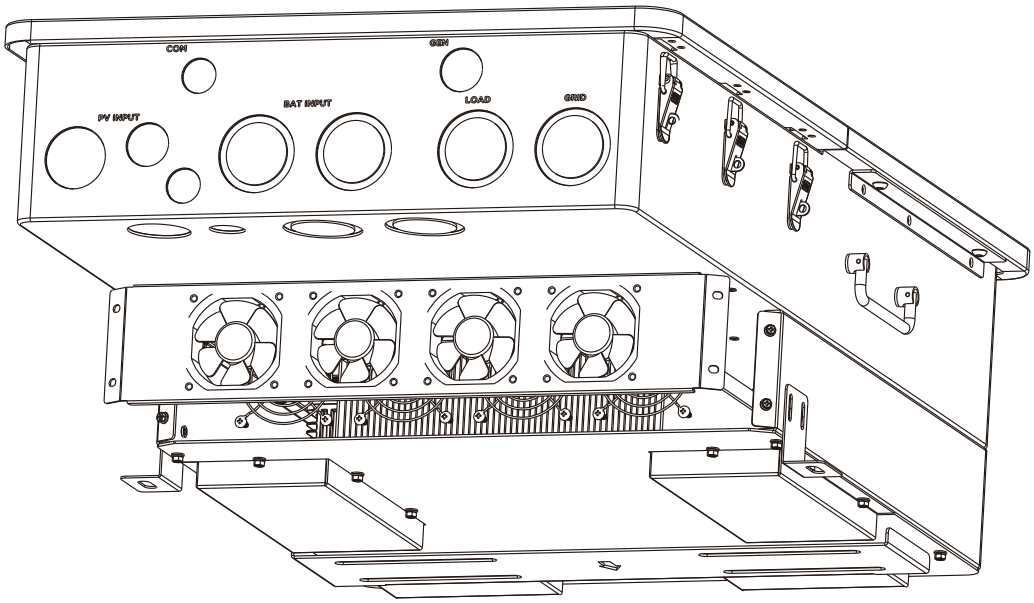

c. Pull out the fan bracket completely, and use a soft brush to clean the fan or replace a damaged fan.

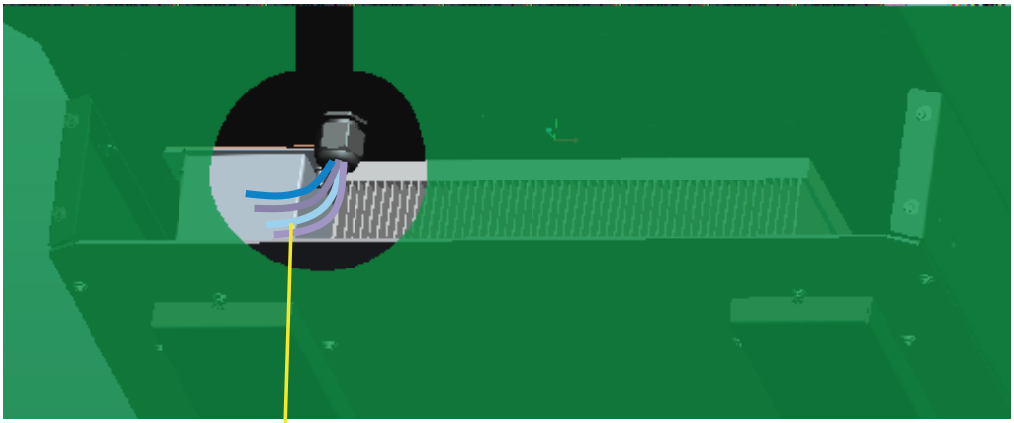

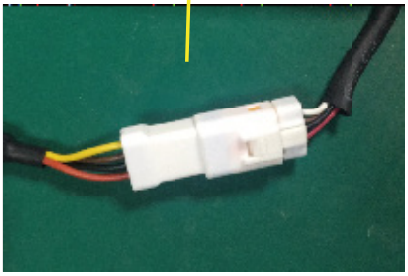

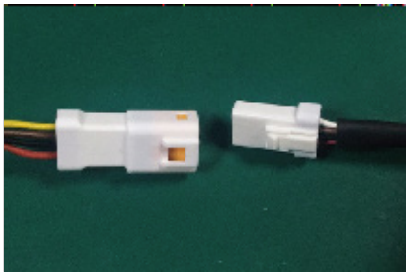

d. Remove the fan and replace it.

e. After the fan is installed, follow the steps just now to push back and assemble it back.

6. Annex1: Technical Data

6.1 Remote control inverter on/off and modify parameter settings

The inverter have the following functions: Remote receive message from the utility or its agent to start or shutdown inverter; Remote receive message from the utility or its agent to complete parameter setting, enable or disable the functions in accordance to Rule21. The control software: Wlocal can be obtained from the equipment provider.

Wlocal software instructions

1. First, the computer is connected to the serial port, then run the Wlocal software, click “connect” to connect, after the connection is OK, you can read and set the data.

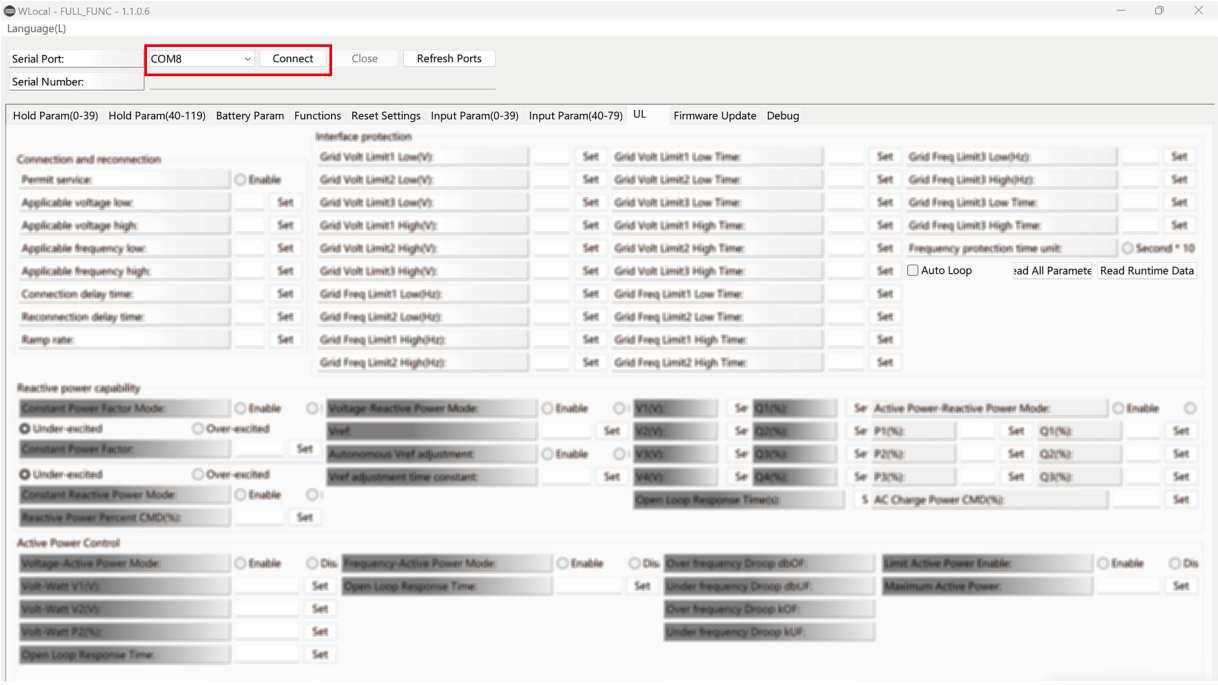

2. Click “layout” and Choose “UL” Page

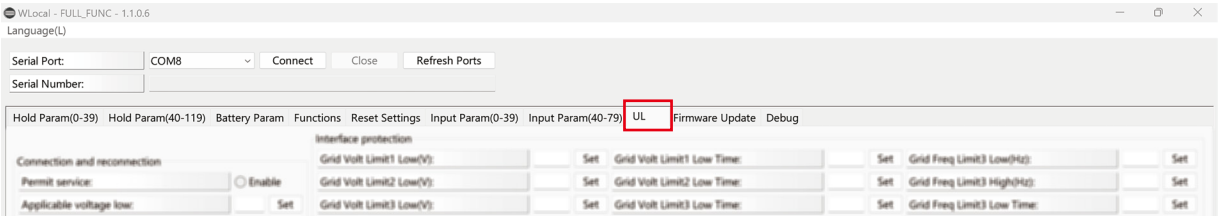

3. In this page, can activation the Rule21 function. Setting the value in the corresponding blank. Before setting, you can read the default value first, and then set the parameter of the function that needs to be modified according to the parameter setting range provided in the next chapter 8.2.

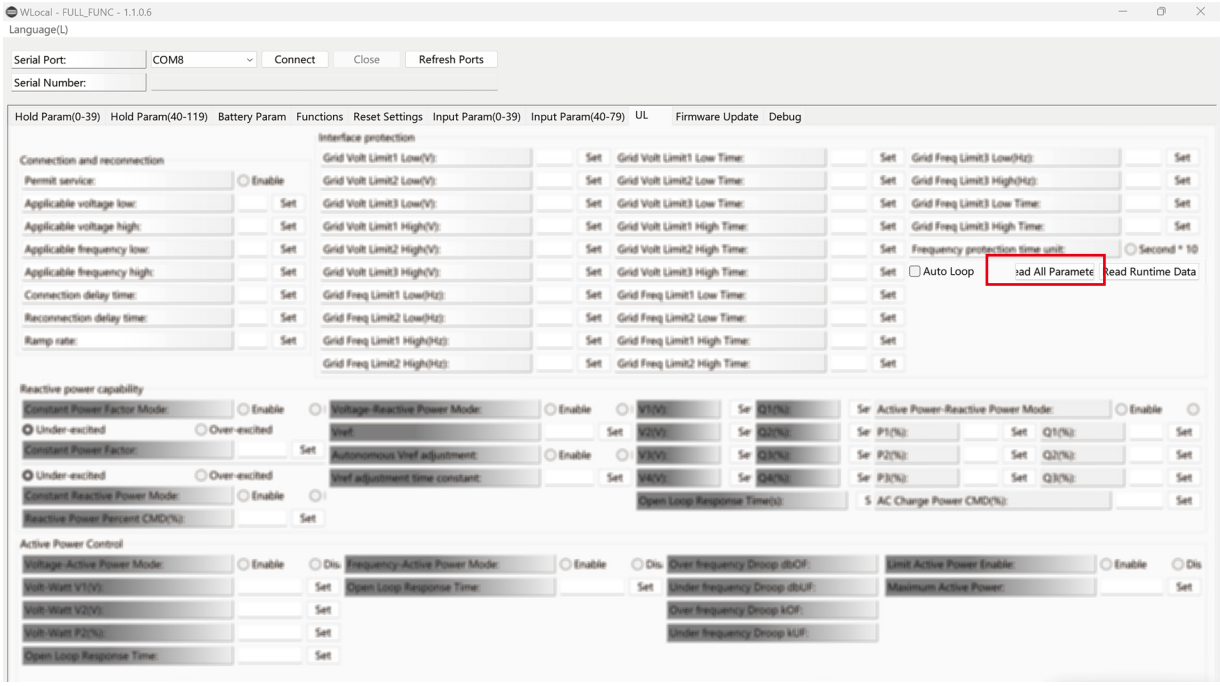

6.2 Parameter setting according to Rule21

6.2.1 Enter service setting

Parameter name	Default Value	Minimum Adjustable Range	Maximum Adjustable Range
Permit service	Enable	N/A	N/A
Applicable voltage low	91.7%Vnom	91.7%Vnom	91.7%Vnom
Applicable voltage high	105%Vnom	105%Vnom	106%Vnom
Applicable frequency low	59.5Hz	59.0Hz	59.9Hz
Applicable frequency high	60.1Hz	60.1Hz	61.0Hz
Connection delay time	300s	1s	600s
Reconnection delay time	300s	1s	600s
Ramp rate	20%Pn/min	6000%Pn/min	6%Pn/min

Ramp rate: When normal startup, the output power rise is 1%~100%, the maximum output current/ section is adjustable.

6.2.2 High Volatge and Low Voltage Trip

Required settings in accordance with UL 1741 SA	Parameter name	Default Value	Minimum Adjustable Range	Maximum Adjustable Range
High voltage 2 HV2	Grid Volt Limit2 High(V)	120%Vnom	Fixed at 120%Vnom	Fixed at 120%Vnom
	Grid Volt Limit2 High Time	160ms	Fixed at 160ms	Fixed at 160ms
High voltage 1 HV1	Grid Volt Limit1 High(V)	110%Vnom	110%Vnom	120%Vnom
	Grid Volt Limit1 High Time	13s	1s	13s
Low voltage 1 LV1	Grid Volt Limit1 Low(V)	88%Vnom	0%Vnom	88%Vnom
	Grid Volt Limit1 Low Time	21s	2s	50s
Low voltage 2 LV2	Grid Volt Limit2 Low(V)	50%Vnom	0%Vnom	50%Vnom
	Grid Volt Limit2 Low Time	2s	160ms	21s

Note: When setting the protection time, it needs to be converted into the number of cycles of the corresponding frequency;

6.2.3 High Frequency and Low Frequency Trip

Required settings in accordance with UL 1741 SA	Parameter name	Default Value	Minimum Adjustable Range	Maximum Adjustable Range
High Frequency 2 HF2	Grid Freq Limit2 High(V)	62.0Hz	61.8Hz	66.0Hz
	Grid Freq Limit2 High Time	160ms	160ms	1000s
High Frequency 1 HF1	Grid Freq Limit1 High(V)	61.2Hz	61.0Hz	66.0Hz
	Grid Freq Limit1 High Time	300s	180s	1000s
Low Frequency 1 LF1	Grid Freq Limit1 Low(V)	58.5Hz	50.0Hz	59.0Hz
	Grid Freq Limit1 Low Time	300s	180s	1000s
Low Frequency 2 LF2	Grid Freq Limit2 Low(V)	56.5Hz	50.0Hz	57.0Hz
	Grid Freq Limit2 Low Time	160ms	160ms	1000s

Note: When setting the protection time, it needs to be converted into the number of cycles of the corresponding frequency;

6.2.4 Specified Power factor(SPF)

The reactive power is controlled as a function if a specified power factor cosϕ.

Parameter name	Default Value	Minimum Adjustable Range	Maximum Adjustable Range
Constant Power Factor Mode	Disable	N/A	N/A
Under-excited/Over-excited	Under-excited	Under-excited	Over-excited
Constant Power Factor	1	0.8	1

Note: Use the selected method to set Under-excited/Over-excited.

6.2.5 Voltage/Var Mode(Q(V))

The reactive power is controlled as a function of the grid voltage. The parameterize-action is carried out by means of a reactive power/voltage characteristic curve. The absolute value of Q1 and Q4 are the same.

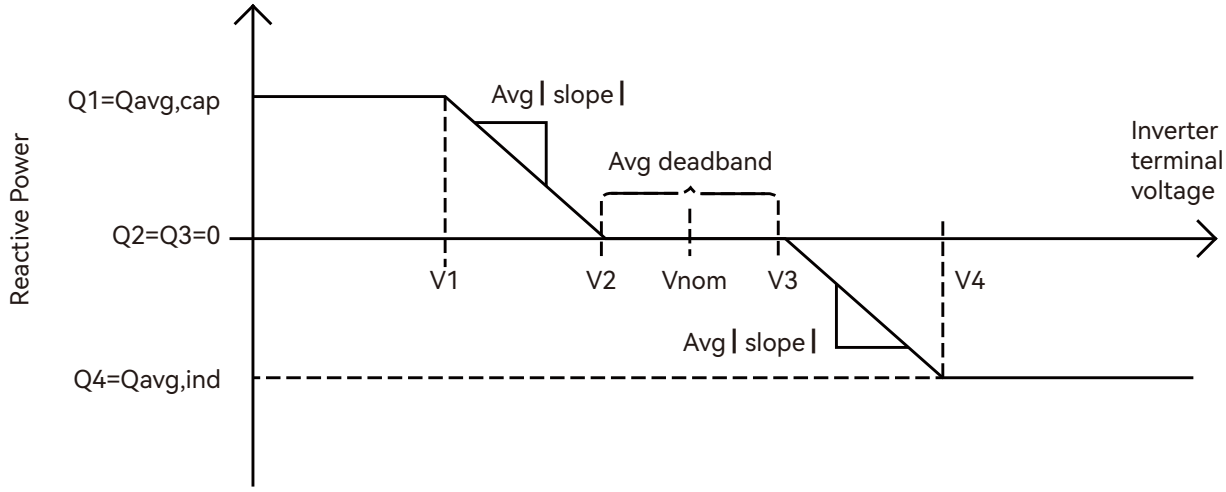

Parameter name	Default Value	Minimum Adjustable Range	Maximum Adjustable Range
Voltage-Reactive Power Mode	Disable	N/A	N/A
Vref	100%Vnom	95%Vnom	105%Vnom
Autonomous Vref adjustment Enable	Disable	N/A	N/A
Vref adjustment time constant	300s	300s	5000s
V2	Verf-2%Vnom	Verf-3%Vnom	100%Vnom
Q2	0	-60% of nameplate apparent power	60% of nameplate apparent power
V3	Verf+2%Vnom	100%Vnom	Verf+3%Vnom
Q3	0	-60% of nameplate apparent power	60% of nameplate apparent power
V1	Verf-8%Vnom	Verf-18%Vnom	V2-2%Vnom
Q1	44% of nameplate apparent power	-60% of nameplate apparent power	60% of nameplate apparent power
V4	Verf+8%Vnom	Verf+18%Vnom	V3+2%Vnom
Q4	44% of nameplate apparent power	-60% of nameplate apparent power	60% of nameplate apparent power
Open Loop Response Time	5s	1s	90s

6.2.6 Active Power-Reactive Power Mode(Q(P))

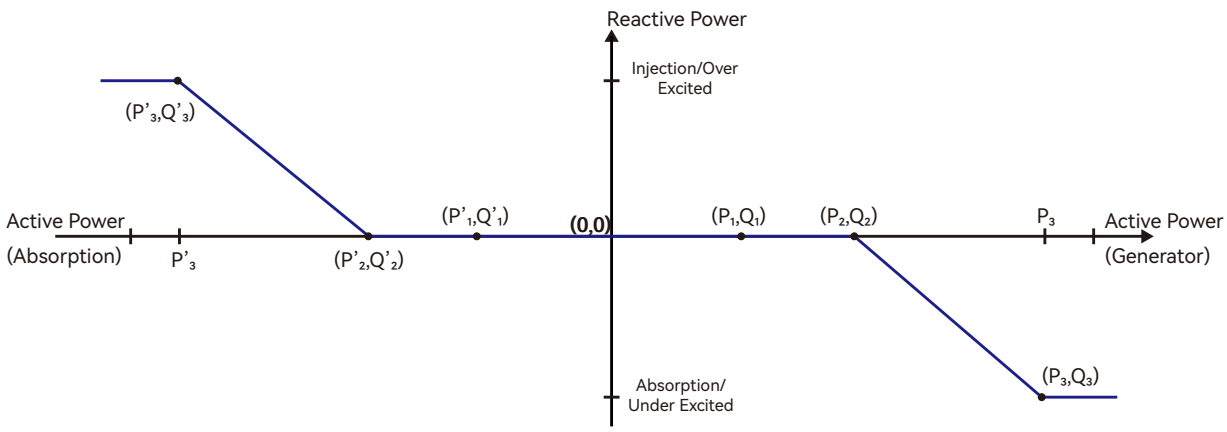

Parameter name	Default Value	Minimum Adjustable Range	Maximum Adjustable Range
Active Power-Reactive Power Mode	Disable	N/A	N/A
P3	100%Pn	P2+10%Pn	100%Pn
P2	50%Pn	40%Pn	80%Pn
P1	0%Pn	0%Pn	P2-10%Pn
Q1	0	-60% of nameplate apparent power	60% of nameplate apparent power
Q2	0		
Q3	44% of nameplate apparent power		

Note: P1, P2, P3 and P1', P1', P1' are Y-axis symmetrical relationship, Q1, Q2, Q3 and Q1', Q2', Q3' are X-axis symmetrical relationship, no need to set P1', P1', P1', Q1', Q2', Q3'.

6.2.7 Constant Reactive Power Mode

Parameter name	Default Value	Minimum Adjustable Range	Maximum Adjustable Range
Constant Reactive Power Mode	Disable	N/A	N/A
Under-excited/ Over-excited	Under-excited	Under-excited	Over-excited
Constant Reactive Power	44% of nameplate apparent power	0	60% of nameplate apparent power

Note: Use the selected method to set Under-excited/Over-excited.

6.2.8 Frequency-Watt(FW)

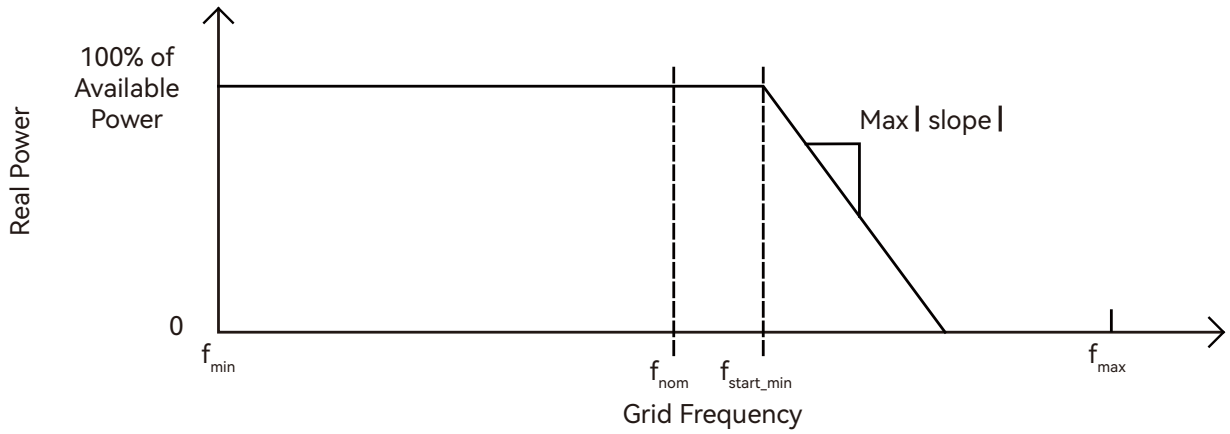

Parameter name	Default Value	Minimum Adjustable Range	Maximum Adjustable Range
Frequency-Active Power Mode	Disable	N/A	N/A
Overfrequency Droop dbOF	0.036Hz	0.017Hz	1Hz
Underfrequency Droop dbUF	0.036Hz	0.017Hz	1Hz
Overfrequency Droop kOF	0.05	0.02	0.07(for HECO)
Underfrequency Droop kUF	0.05	0.02	0.07(for HECO)
Open Loop Response Time	0	200ms	10s

Note: When setting the protection time, it needs to be converted into the number of cycles of the corresponding frequency.

6.2.9 Voltage-Watt(VW)

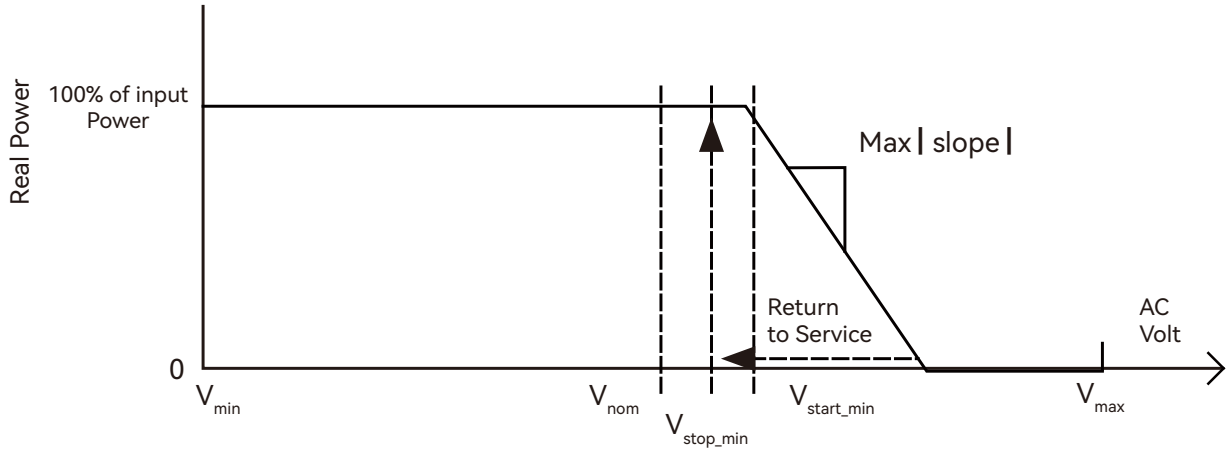

When the grid voltage exceeds V1, the output active power varies with the grid voltage.

Parameter name	Default Value	Minimum Adjustable Range	Maximum Adjustable Range
Voltage-Active Power Mode	Disable	N/A	N/A
V1	106%Vnom	105%Vnom	109%Vnom
P1	Ppre-disturbance (for active power output at the time voltage exceeds V1 in p. u. of Prated)	N/A	N/A
V2	1.1*Un	1.04*Vn	1.10*Vn
P2	Pmin (for Advanced Inverters that can only inject active power, Pmin should approach 0)	N/A	N/A
Open Loop Response Time	10s	0.5s	60s

Note: When setting the protection time, it needs to be converted into the number of cycles of the corresponding frequency.

6.2.10 Active power limit mode

Parameter name	Default Value	Minimum Adjustable Range	Maximum Adjustable Range
Active power limit mode	Enable	N/A	N/A
Maximum Active Power(%)	100	0	100

6.3 Test parameter tolerances

Parameter	Units	Default Tolerance of Measurement
Voltage	Volts	±1%Urated
Current	Amps	±1%Urated
Power	Watts	±1%Urated
Reactive Power	VA	±5%Srated
Power Factor	Displacement power factor	±0.01
Frequency	Hz	±0.05
Response Time	Seconds	1
Time accuracy	Total time	0.1%

7. Annex2: Lithium Brand Reference

Num	Lithium Brand Displayed on LCD	The Battery Brand
0	Lithium_0	Standard Protocol/Zetara/EG4
1	Lithium_1	HINAESS Battery
2	Lithium_2	Pylontech/UZ Energy
3	Rsvd	Rsvd
4	Rsvd	Rsvd
5	Lithium_5	GSL1 Battery
6	Lithium_6	Lux Protocol
7	Rsvd	Rsvd
8	Rsvd	Rsvd
9	Rsvd	Rsvd
10	Rsvd	Rsvd
11	Rsvd	Rsvd
12	Rsvd	Rsvd
13	Rsvd	Rsvd
14	Rsvd	Rsvd
15	Rsvd	Rsvd
16	Rsvd	Rsvd
17	Rsvd	Rsvd
18	Lithium_18	Fortress Battery
19	Lithium_19	Sunwoda Battery

PV Input data	9.6K PRO	12K PRO	13K PRO	16K
Max. usable input current(A)	26/26/15			
Max. short circuit input current(A)	31/31/19			
Start input voltage(V)	100			
Start up voltage(V)	140			
Full power MPPT voltage range(V)	250-440			
DC nominal voltage(V) MPPT tracker	360			
DC voltage range(V)	100-550			
MPPT operating voltage range(V)	120-440			
Max. PV input power(W)	21000			
Number of MPPT	3			
Inputs per MPPT	2/2/1			
AC Grid				
Nominal output current(A)	40@240V/46@208V	50@240V/57.7@208V	54@240V/62.5@208V	66.7
Max. output current(A)	40@240V/46@208V	50@240V/57.7@208V	54@240V/62.5@208V	66.7
Rated voltage(V)	240; 208			
Operating voltage range(V)	180-270			
Continuous power output(W)	9600	12000	13000	16000@240V/ 13800@208V
Operating frequency(Hz)	50/60			
Operating frequency range(Hz)	55-65			
Phase shift	0.99@full load			
Reactive power adjust range	-0.8~+0.8 leading Adjustable			
THDI	< 3%			
Max. continuous AC passthrough current (A)	200			
GEN				
Rated GEN voltage (V)	240 ; 208			
Rated GEN frequency (Hz)	50/60			
Rated GEN input current (A)	62.5			
Max. GEN input current (A)	80			
Rated GEN input power (W)	15000			
UPS AC output				
Nominal output current(A)	50@240V ; 57.7@208V			
Nominal output voltage(V)	[240][120/240][120/208]			
Continuous output power(VA)	12000			
Operating frequency(Hz)	50/60			
Peak power(VA)	2×Pn, 0.5s			
THDV	< 3%			
Switching time (ms)	< 20			

Efficiency	
Max. efficiency@PV to grid	97.5%
Max. efficiency@battery to grid	94.0%
CEC efficiency	96.9%
Battery data	
Type	Lithium-ion battery/Lead-acid battery
Max. charging/discharging current (A)	250
Max. charging/discharging power (W)	12000
Norminal voltage(V)	48
Voltage range(V)	40-60
General data	
Integrated disconnect	DC switch
Reverse polarity protection	Yes
DC switch rating for each MPPT	Yes
Output over-voltage protection varistor	Yes
Output over current protection	Yes
Ground fault monitoring	Yes
Grid monitoring	Yes
Pole sensitive leakage current monitoring unit	Yes
AFCI	Yes
RSD	Yes
Dimensions	566*893*285mm / 22.3*35.2*11.2 in
Weight	57kg/125.7lbs
Degree of protection	NEMA4X / IP66
Cooling concept	FAN
Topology on AC / Battery side	Transformerless / Transformer
Relative humidity	0-100%
Max. operating altitude (m)	4000, > 2000 Derating
Operating temperature range(℃)	-25~60℃, > 45℃ Derating
Internal consumption(W)	< 60W
Display	Touch color screen
Communication interface	RS485/Wi-Fi/CAN
Standard warranty	5/10 years

Note

Note

YOUR RELIABLE ENERGY SOLUTION PARTNER

luxpowertek

Lux Power Technology Co., Ltd
Headquarter: +86 755 8520 9056
www.luxpowertek.com
Contact us: info@luxpowertek.com

092.20082AD