Hybrid Inverter User Manual

GEN-HB-US 25K

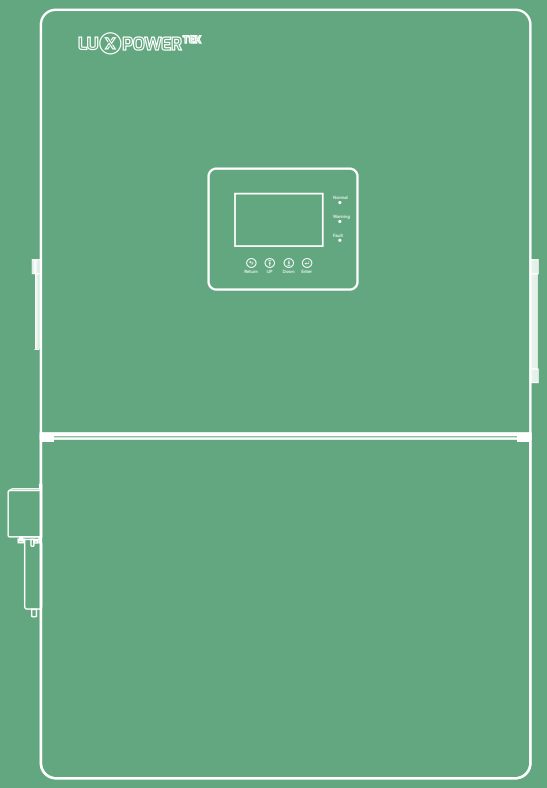

LUXPOWERTEK

Version: UM-GENUS03001E02

Copyright© 2025 Lux Power Technology Co., Ltd. All Rights Reserved. This manual, protected by the copyright and intellectual property rights of Lux Power Technology. No part of this document may not be modified, copied, or reproduced without prior written permission.
All brands and trademarks mentioned belong to their respective owners.

Please read carefully carefully to understand product reliability and warranty eligibility. For detailed warranty information, refer to the Lux Power Technology Co., Ltd Warranty. This manual is intended for professional service providers. Nothing in this document constitutes an express or implied warranty.

Descriptions may include forward-looking statements. Actual conditions may differ. This document is provided for reference only and is subject to change without notice by Lux Power Technology Co., Ltd.

Website

YouTube

Facebook

www.luxpowertek.com

Scan to download

Table Of Contents

Information on this Manual 01
Validity 01
Scope 01
Target Group 01
1. Safety Instruction 01
1.1 Safety Statements 01
1.2 Symbol Conventions 01
1.3 Important Safety Notifications 02
2. Product Introduction 04
2.1 System Solution 04
2.2 Product Features 05
2.3 Product Dimensions 05
2.4 Interface of the Inverter 06
2.5 Packing List 07
3. Handling and Storage 08
3.1 Handling 08
3.2 Storage 08
4. Installation 09
4.1 Precautions 09
4.2 Installation Tools 09
4.3 Selecting Installation Location 10
4.4 Installing the Inverter 11
5. Electrical Connection 15
5.1 Precautions 15
5.2 System Connection 16
5.3 Recommended Breakers 16
5.4 Terminal Overview 17
5.5 Wiring Preparation 18
5.6 Battery Connection 19
5.7 PE Wire Connection 21
5.8 AC Cable Connection 22

5.9 PV Connection 26
5.10 CT Connection 28
5.11 Meter Connection 30
5.12 GEN Port Function 31
5.13 Smart Load 34
5.14 AC Coupling 36
5.15 Parallel System Connection 39
5.16 Monitor System Setup 44
6. Operation Guide 47
6.1 Operation Mode and Function 47
6.2 Rapid shutdown 50
6.3 LCD Display 50
7. Maintenance 54
7.1 Startup and Shutdown the Inverter 54
7.2 Regular Maintenance 55
7.3 Removing the Inverter 56
7.4 LED Displays 56
7.5 Troubleshooting 57
7.6 Fan replacement 61
8. Annex: Lithium Brand Reference 63

Revision History

Version	Date	Description
UM-LXPUS02001E	2024.08.06	First official release.
UM-LXPUS02001E01	2025.03.03	Added operation description for knockouts.
UM-GENUS03001E02	2025.10.27	Add safety instructions and known issues.

Information on this Manual

Validity

This manual is valid for the following devices: GEN-HB-US 25K.

Scope

This manual provides comprehensive product information and step-by-step installation instructions for the GEN-HB-US 25K series hybrid inverter (hereinafter referred to as “the inverter”). The product is developed and manufactured by Shenzhen LuxpowerTek Technology Co., Ltd. (hereinafter referred to as “LuxpowerTek”).

Before using this product, please read this manual carefully and keep it for future reference.

Target Group

This manual is intended for both professionals and end users. Professionals and end users should possess the following knowledge and skills:

- Understanding of the operating principles of this device.
- Training in installation and electrical safety.
- Experience in installing and commissioning electrical equipment and systems.
- Familiarity with applicable local standards and regulations.

1. Safety Instruction

1.1 Safety Statements

This inverter is designed in compliance with international safety standards. Before installation, operation, or maintenance, please read this manual thoroughly and follow all safety warnings. Installation and operation must comply with local laws and industry standards. The safety information provided in this manual serves as supplementary guidance and does not replace local regulatory requirements.

Failure to use this equipment under the prescribed conditions may result in personal injury, equipment damage, or property loss. Such incidents are not covered under the warranty.

1.2 Symbol Conventions

The following symbols used in this document have the following meanings:

⚠ DANGER	⚠ WARNING	⚠ CAUTION	● NOTICE
Indicates an extremely hazardous situation. Failure to observe this warning may result in serious injury or death.	Indicates a potentially hazardous situation. Failure to observe this warning may result in serious injury or death.	Indicates a situation that may cause minor or moderate personal injury if proper precautions are not taken.	Indicates a potentially hazardous condition that may result in equipment damage or property loss if ignored.

The symbols present on the nameplate of the HYBRID inverter convey the following meanings:

	Surface Temperature Warning. The inverter may produce heat while in operation. Avoid touching.
	High Voltage Warning. The inverter contains high internal voltage, presenting a life-threatening hazard.
	Electric Shock Warning.
5min	High Voltage Warning. Before performing any operations, ensure that the residual voltage within the inverter is discharged for a duration of 5 minutes.
	Please adhere to the documents attached.

1.3 Important Safety Notifications

There are various safety issues that must be carefully conveyed prior to during and after the installation, as well as during future operation and maintenance. The following are important safety notifications for the operator, owner and user of this product under normal conditions of use.

DANGER

Dangers of High Voltages and Large Current

- Beware of high PV voltage. Please turn-off the DC switch of PV Panel output before and during the installation to avoid electric shock.
- Beware of high grid voltage. Please turn-off the AC switch at the grid connection before and during the installation to avoid electric shock.
- Beware of large current of the battery output. Please turn-off the battery module before and during the installation to avoid electric shock.
- Do not open the inverter when it's working to avoid electric shock and damage from live voltage and current from the system.
- Do not operate the inverter when it's working, only the LCD and buttons can be touched in limited cases by qualified personnel, other parts of the inverter can be touched when the inverter is in a a safe state (e.g. fully shut-down).
- Do not connect or disconnect any connection (PV, battery, grid, communication etc.) of the inverter when it's working.
- Make sure the inverter is well grounded, an operator should make sure he is well protected by reasonable and professional insulation measurements (e.g. personal protective equipment (PPE)).
- Inspect relevant existing wiring on-site of the installation is in good condition before installation, operation or maintenance.
- Inspect that connections are good between the inverter and PV, battery and grid during installation to prevent damages or injuries caused by bad connections.

DANGER

- Before performing maintenance, turn off the AC circuit breaker on the grid side first, then turn off the battery breaker, and finally switch off the PV DC breaker. Confirm that all indicator lights are off.
- After power-down, wait at least 5 minutes and use proper testing equipment to confirm that internal voltage has dropped to zero before beginning maintenance with protective gear.
- Even after shutdown, the inverter may still be hot to the touch. Allow sufficient cooling time, and always wear insulated gloves when handling the unit.

WARNING

Avoid Misoperation and Inappropriate Usage

- All the work of this product (system design, installation, operation, setting, configuration and maintenance must be carried out by qualified personnel as required.
- All connections must be in accordance with local and national regulations and standards.
- The inverter and system can inter-connected with the utility grid only if the utility grid permits it.
- All the warning labels or nameplates on the inverter must be clearly visible and must not be removed, covered or pasted.
- The installation should consider the safety of future users when choosing the right position and location as specified in this manual.
- Please keep the children away from touching or misusing the inverter and relevant systems.
- Beware of burning hurt, the inverter and some parts of the system could be hot when working, please do not touch the inverter surface or most of the parts when they are working. During inverter working states, only the LCD and buttons could be touched.

NOTICE

- Please carefully read this manual before any work is carried out on this inverter, the installation, please keep this manual carefully stored and easy to access at any time.
- The qualified personnel should have had training in the installation and commissioning of the electrical system as well as dealing with hazards, also they should have the knowledge of the manual and other related documents. As the installer or operator they are required to be familiar with local regulations and directives.

2. Product Introduction

2.1 System Solution

This product and its associated system are suitable for the following system applications (system diagram):

A. Solar and battery storage system

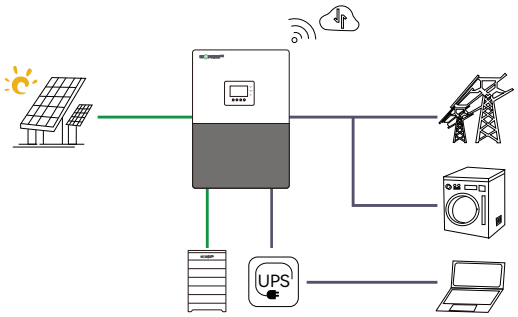

B. AC Coupling with existed solar system

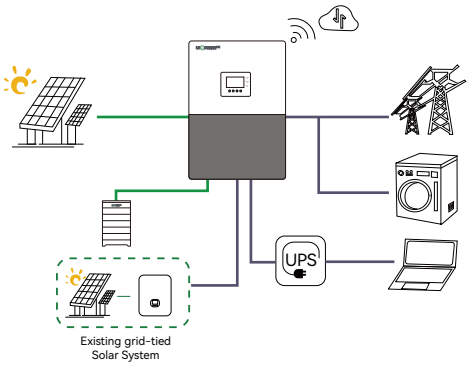

C. On-grid solar system without battery
(Support EPS even without battery)

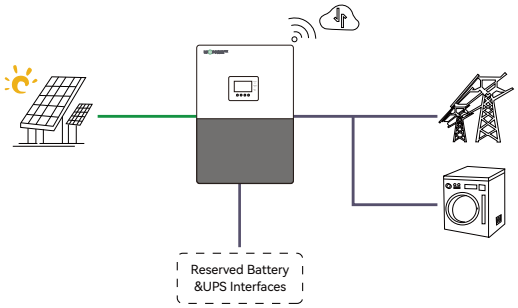

D. Off-grid and back-up applications

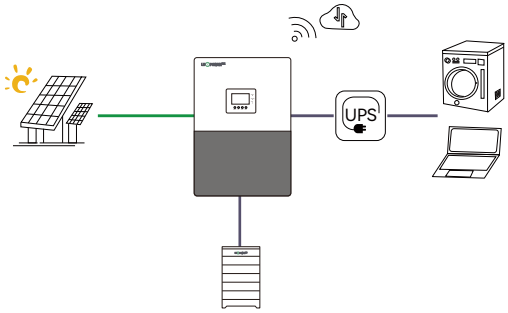

E. Single and three phase paralleling system

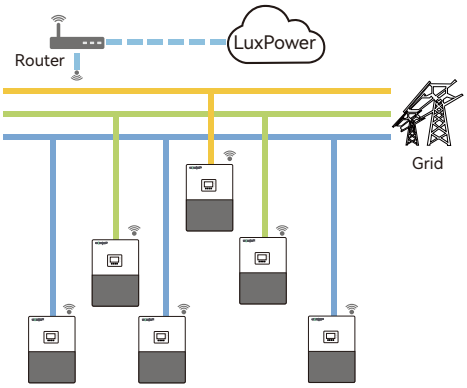

F. Energy storage system with peak shaving Function

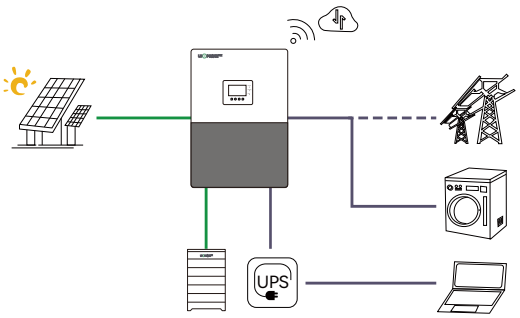

2.2 Product Features

- 120/240V split-phase output with a rated power of 25kW.
- Equipped with 6 independent MPPT trackers, supporting 8 PV input strings, with a maximum PV input power of up to 48kW.
- Compatible with high-voltage battery systems for efficient energy storage and management.
- Provides whole-house backup capability, supporting a maximum bypass output current of up to 200A.
- Supports parallel operation of up to 6 units, enabling system expansion for higher power requirements.
- Optimized design for small commercial and industrial applications as well as high-energy-demand households.

2.3 Product Dimensions

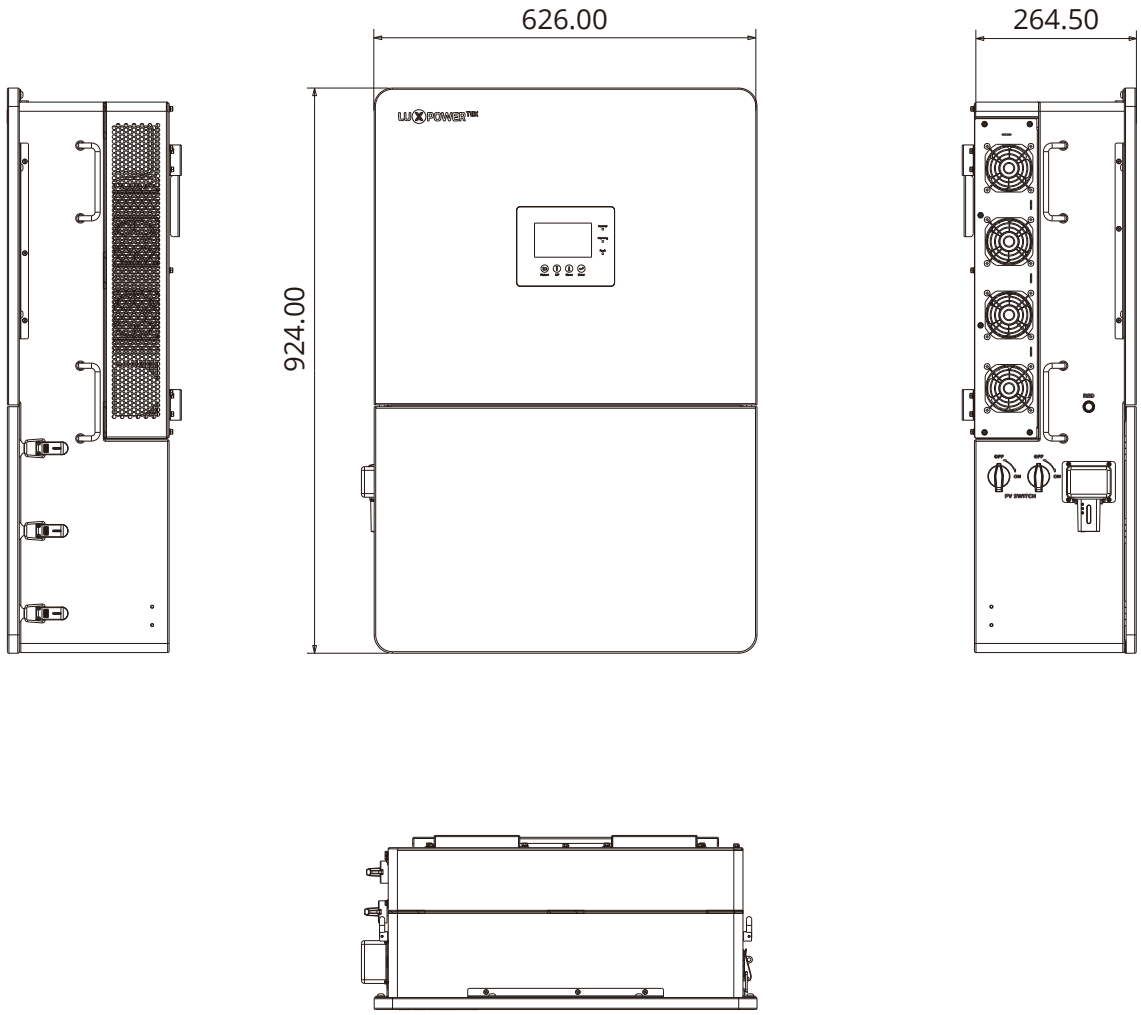

2.4 Interface of the Inverter

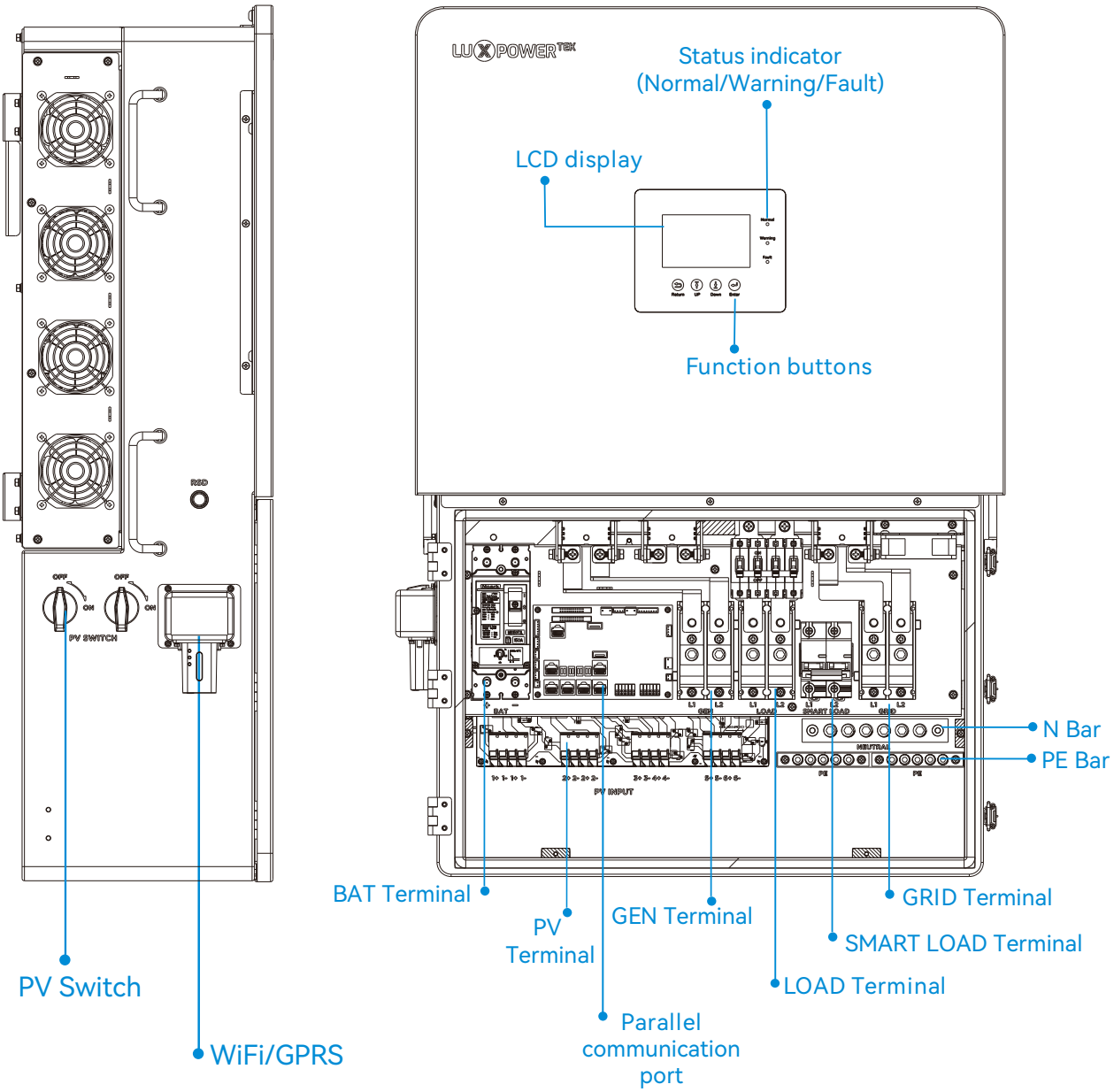

2.5 Packing List

When the packaging is unpacked, the inner components should match those listed in the list below.

Hybrid Inverter ×1

User Manual ×1

Expansion Screw and Self-tapping Screw 6+6

1” CT ×2

Wi-Fi dongle
Optional ×1

Parallel communication cable L=2m ×1 (Grey)

Battery communication cable L=2m ×1 (Orange)

Paper board ×1

Wall-mounted ×2

Cross Head Screw M5 ×4

Cross Head Screw M3 ×4

RJ 45 Terminal ×4

Bracket: wall-mounted ×1

3. Handling and Storage

3.1 Handling

Improper handling may cause personal injury!

- Before handling, carefully check the symbols and markings on the inverter packaging and follow the indicated direction.
- When handling manually, wear protective gloves to avoid injury.
- The inverter is heavy; at least two people are required for manual handling, and the lifting capacity must be confirmed beforehand.
- Move the inverter to its designated installation location before unpacking or installation.
- Do not place the inverter directly on a hard surface, as this may damage its metal casing. Place a protective pad such as foam or sponge underneath.
- Always hold the inverter by its designated handles during transport. Do not lift or carry the inverter by its terminals.
- Do not place heavy objects on top of the inverter under any circumstances.

3.2 Storage

If the inverter is not to be used immediately, it should be kept inside its original packaging and stored in a well-ventilated, dry environment.

- The inverter and all its accessories must remain in their original packaging until installation.
- Storage temperature: −15°C to 60°C; relative humidity: 0–85%.
- Packages must be stored upright and may be stacked up to seven (7) layers high.
- Do not expose the inverter or its packaging directly to sunlight, rain, or high humidity.
- Keep the inverter away from corrosive, dusty, or chemically reactive environments.

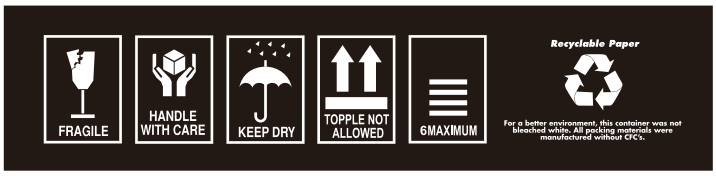

4. Installation

4.1 Precautions

⚠ Do not install the inverter in the following environments:

- Under direct sunlight.
- Areas where flammable or explosive materials are stored.
- Potentially explosive atmospheres.
- Locations directly exposed to cold air outlets.
- Near television antennas or antenna cables.
- At altitudes above 3000 m.
- Areas subject to rainfall or humidity greater than 95%.

4.2 Installation Tools

Recommended tools for installation:

Protective goggles	Anti-dust mask	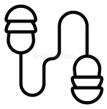 Earplugs	Work shoes	Work gloves
Percussion drill	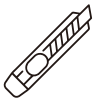 Utility knife	Marker	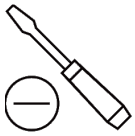 Slotted screwdriver	Cross screwdriver
Pliers	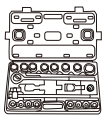 Socket wrenches set	Rubber hammer	Wire cutter	Level
Anti-static wrist strap	Wire stripper	Heat gun	Hydraulic pliers	Allen Key
Crimping tool 4–6 mm²	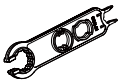 Solar connector wrench	Multimeter ≥1100 VDC	RJ45 crimping plier	Cleaner

4.3 Selecting Installation Location

a. The mounting wall should be strong enough to bear the weight of the inverter.

b. Please maintain the minimum clearances presented below for adequate heat dissipation.

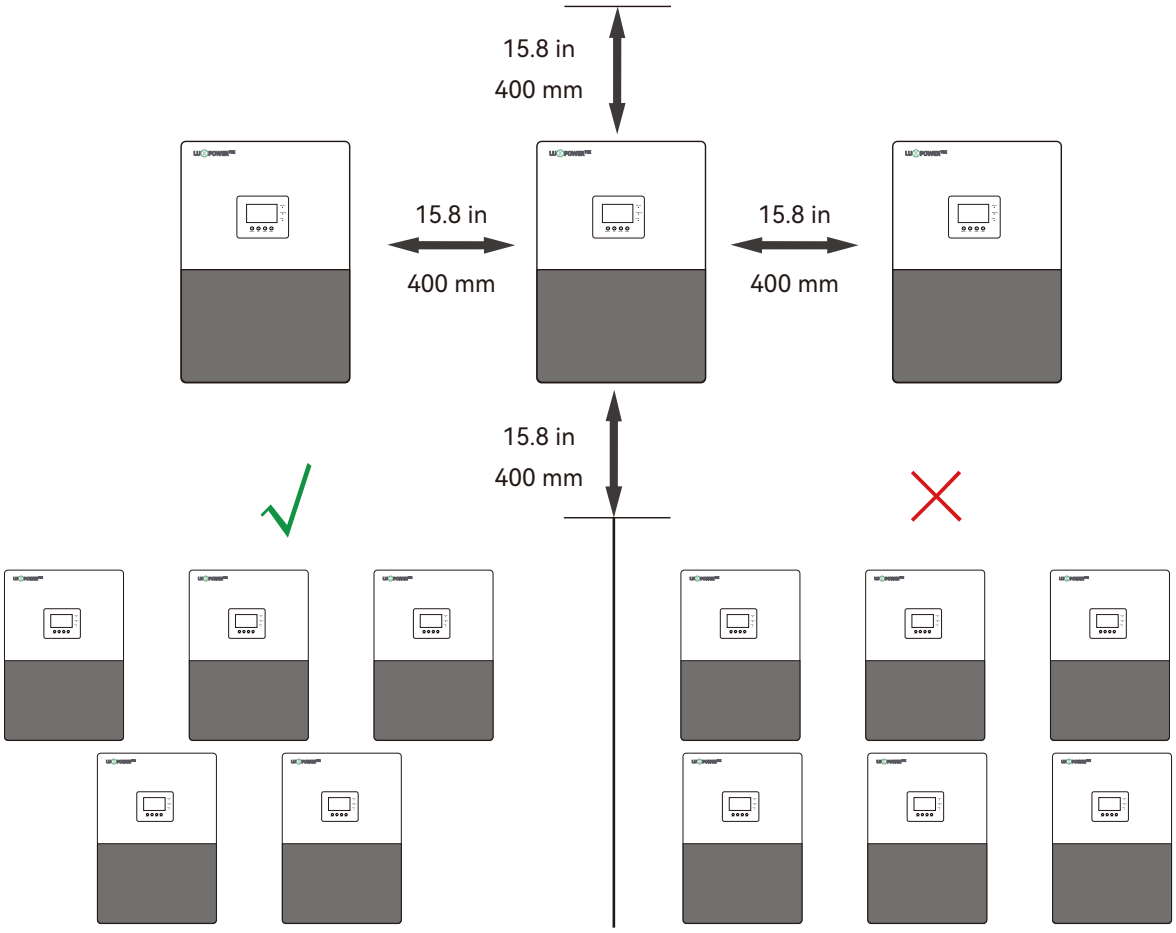

c. Never position the inverter in direct sunlight, rain, or snow. Please refer to the figure below and choose a well-shaded site or a shed to protect the inverter from direct sunlight, rain, and snow etc. PROTECT the LCD screen from excessive UV exposure.

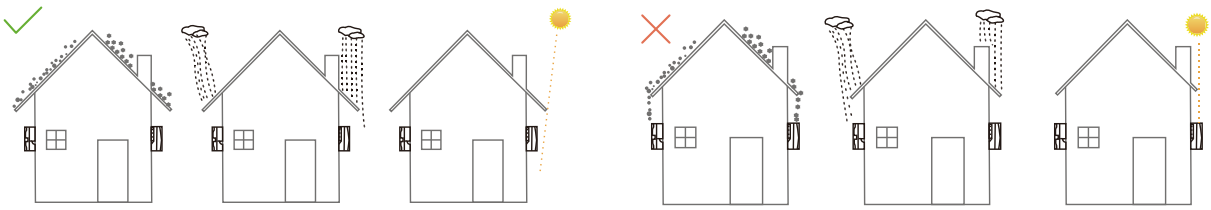

d. The inverter should be installed upright on a vertical surface.

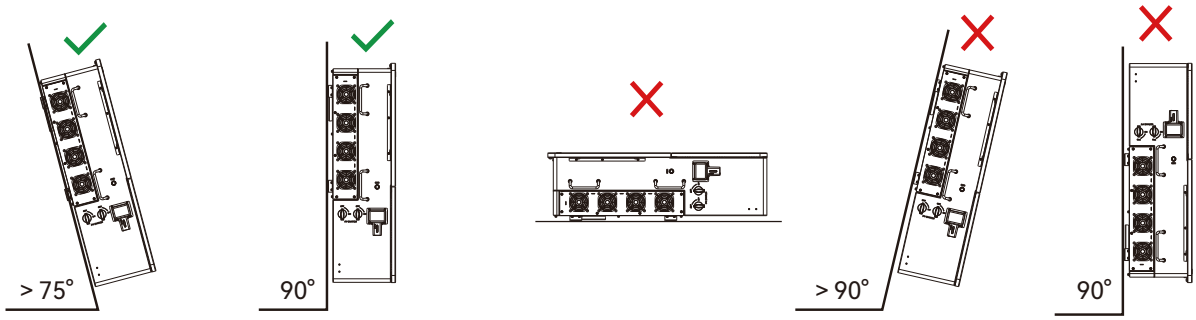

4.4 Installing the Inverter

4.4.1 Remove the Knockout

NOTICE

- Important Notice: As this inverter adopts a knockout cable entry design, it is essential to remove the corresponding knockout holes according to the actual wiring requirements prior to installation. After the required openings have been prepared, securely mount the inverter onto the wall or bracket.
- Before performing any knockout operations, please carefully plan the system wiring layout in advance to avoid incorrect or excessive hole removal.
- This equipment is rated IP65, ensuring protection against dust and water ingress. However, when installed in outdoor environments, unsealed or improperly sealed knockout holes, or failure to use appropriate waterproof cable glands, may result in water intrusion and potential safety hazards.

1. Tool Preparation

Please prepare the following tools: knockout punch, flathead screwdriver, hammer, safety goggles, brush or vacuum cleaner. (Ensure all tools are in good condition, and that the safety goggles provide adequate protection.)

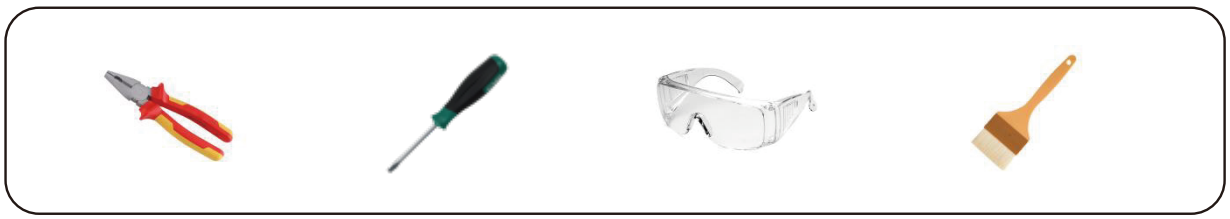

2. Step-by-Step Procedure

1

1. Place the inverter horizontally on a stable surface (such as a table or the floor) to ensure stability during operation and to prevent debris from falling inside.

2

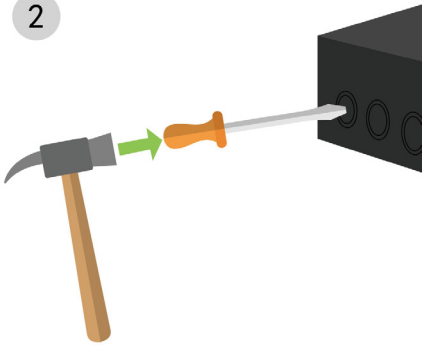

2. Select the appropriate knockout hole based on the cable routing, then lightly tap the edge of the knockout hole with a hammer and screwdriver.

3

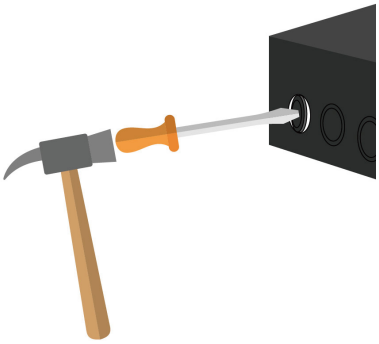

3. Loosen the knockout cover. Avoid using excessive force to prevent damaging the casing or internal circuits.

4

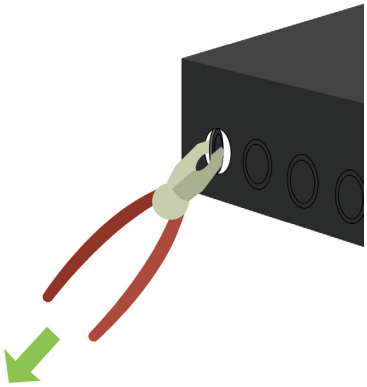

4. Use pliers to grip the loosened knockout cover and gently pull it out.

5

5. Use a brush or vacuum cleaner to clear any metal shavings that have fallen inside, ensuring no debris remains inside the device.

6

If the knockout hole is not filled after wiring, it must use a waterproof connector (such as a NEMA-rated able gland) or sealing ring to cover the gap, preventing dust and water from entering.

4.4.2 Installing the inverter

Precautions

- This inverter is designed for wall-mounted installation. It must be installed on a vertical and solid surface, such as a wooden stud wall, brick wall, or concrete wall.
- Due to the weight of the inverter, it is recommended that at least two people work together during installation.
- Two types of mounting screws are provided with the product. Please select the appropriate type based on the wall material:

  Expansion bolts: Suitable for concrete or brick walls.

  Self-tapping screws: Suitable for wooden or other lightweight structure walls.
- The mounting bracket slots are designed to fit various stud spacings, supporting a range of 6.7 inches (170 mm) to 17.3 inches (440 mm) between mounting holes.

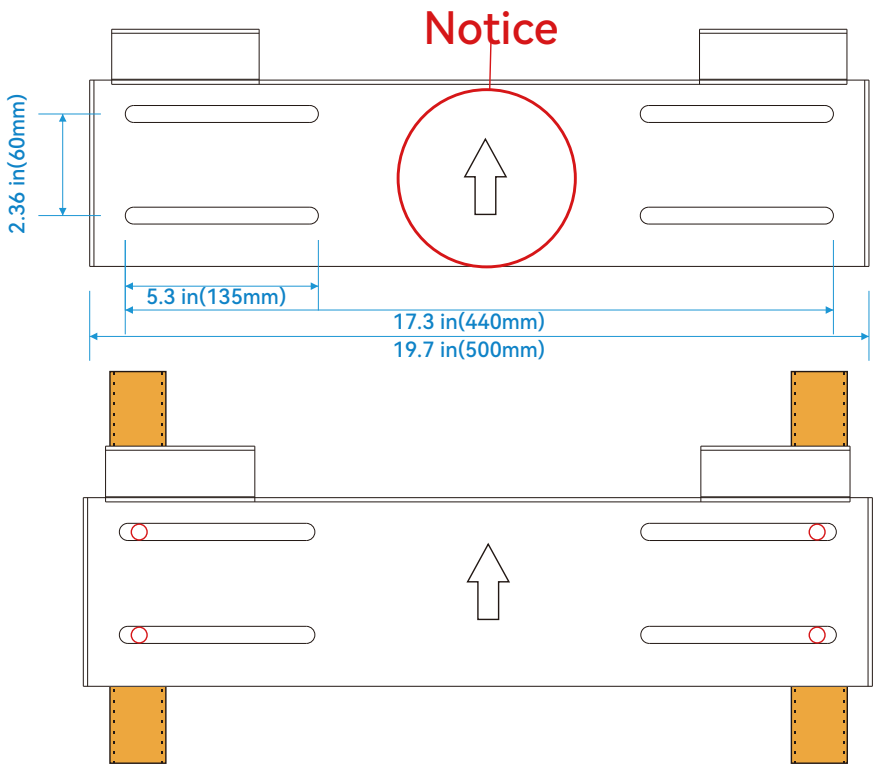

Installing Procedures

Step 1. Mark the drill holes positions with the mounting bracket, then drill 4mm (0.31inch) diameter holes, making sure the depth of the holes is deeper than 50mm (2inches).

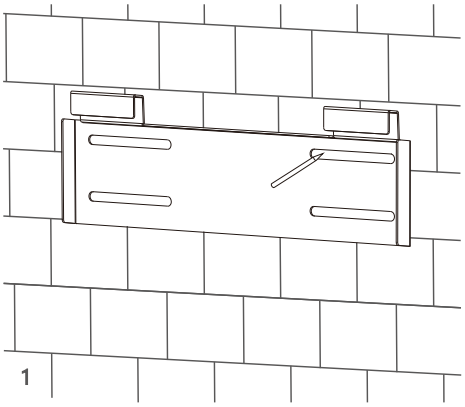

Step 2. Install and tighten the expansion bolts into the holes (on concrete wall). Then use the corresponding nuts and washers (packaged together with the expansion bolts) to install and fix the wall-mounting bracket on the wall.

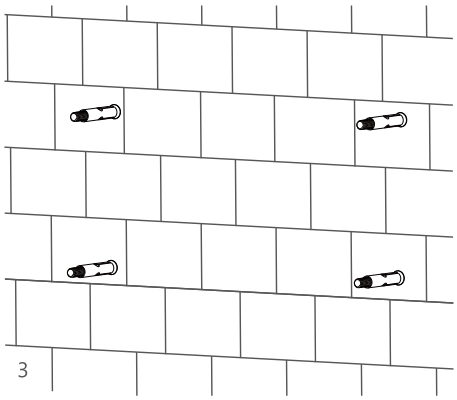

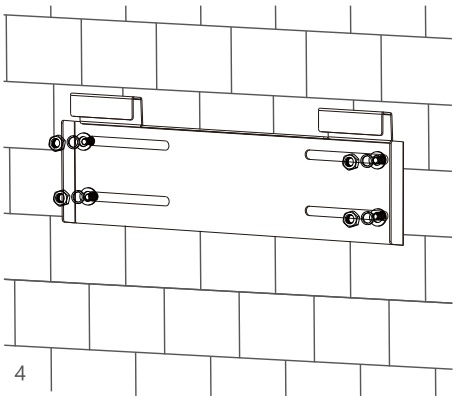

Step 3. Hang the inverter onto the wall-mounting bracket and lock the inverter on the wall using 2 self-tapping screws on the top of the inverter, lock the safety screws on the left and right sides.

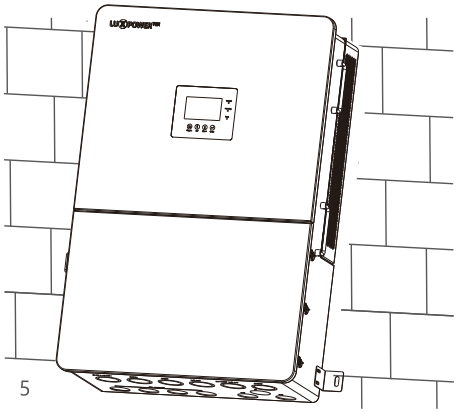

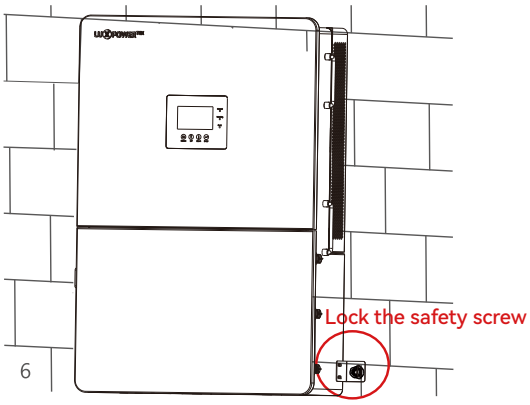

For installation on wood studs

Fasten the mounting bracket on the studs with 4 wood screws, then hang the inverter onto the bracket and lock the inverter on the wall with 2 self-tapping screws.

5. Electrical Connection

5.1 Precautions

During electrical operations, personnel with expertise must wear appropriate protective equipment.

DANGER

- Caution: High voltage is present within the inverter!
- Warning: Photovoltaic strings exposed to sunlight can generate hazardous voltages.
- Before completing any electrical connection, make sure the PV Switch, System Switch, and AC Breaker are all disconnected
- Before conducting electrical connections, ensure that all cables are de-enerqized.

WARNING

- Improper wiring operations may cause equipment damage or personal injury.
- All wiring operations must be performed independently by qualified technicians.
- Throughout the electrical connection process, use insulated tools and wear PPE.
- Cables used in the PV power system must be securely connected, in good condition, properly insulated, and meet the specified ratings.
- Strictly follow the connection instructions provided in this manual or other relevant documents.
- Any inverter damage caused by incorrect wiring is not covered under warranty.

CAUTION

- The wiring process must comply with the safety instructions of the PV modules.
- All electrical installations must conform to the national or regional electrical standards of the installation site.

5.2 System Connection

The system connection diagram is as below (for US version):

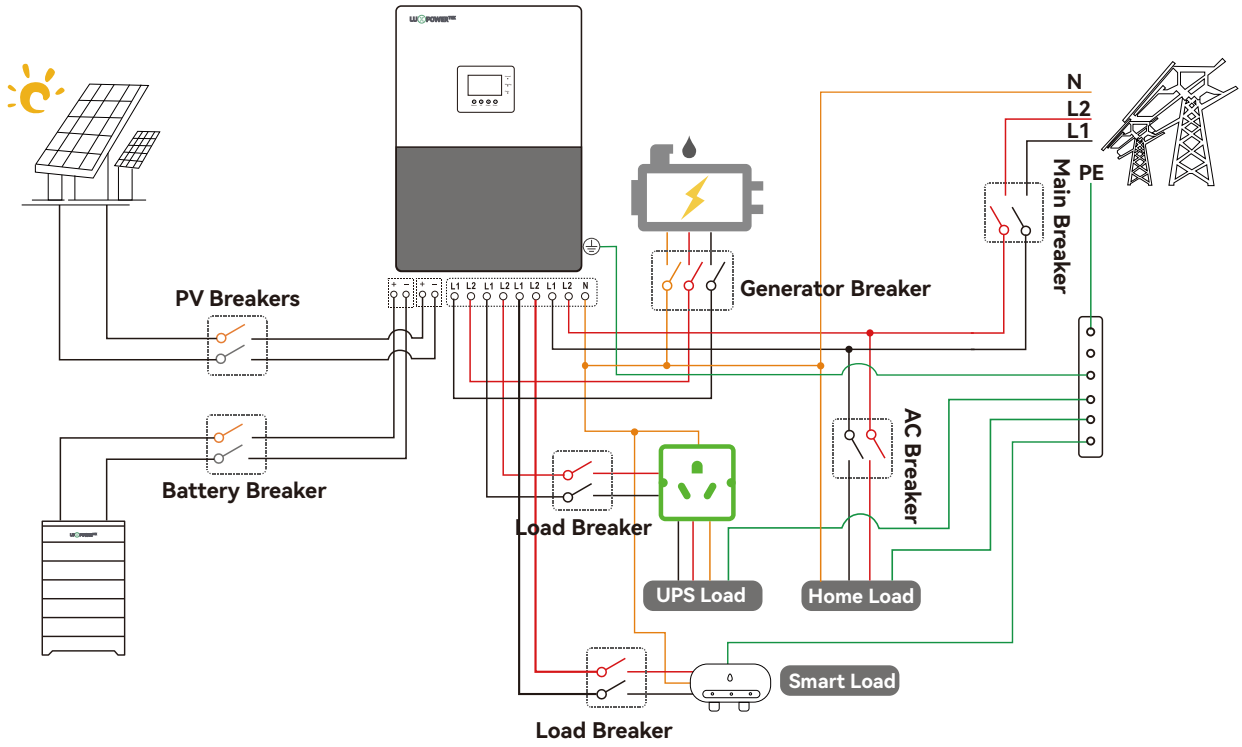

5.3 Recommended Breakers

Inverter model	GEN-HB-US 25K
PV Breakers(2P×8)	MPPT1 string 1: 600V/20A; MPPT1 string 2:600V/20A MPPT2 string 1:600V/20A; MPPT2 string 2: 600V/20A MPPT3:600V/20A; MPPT4:600V/20A MPPT5 :600V/20A; MPPT6:600V20A
Main Breaker	200A/240Vac
Generator Breaker	200A/240Vac
Integrated Smart Load Breaker	125A/240Vac
Integrated Battery Breaker	150A/500Vdc
Integrated Load Breaker	L1: 200A L2: 200A

5.4 Terminal Overview

Overview of Connection Ports

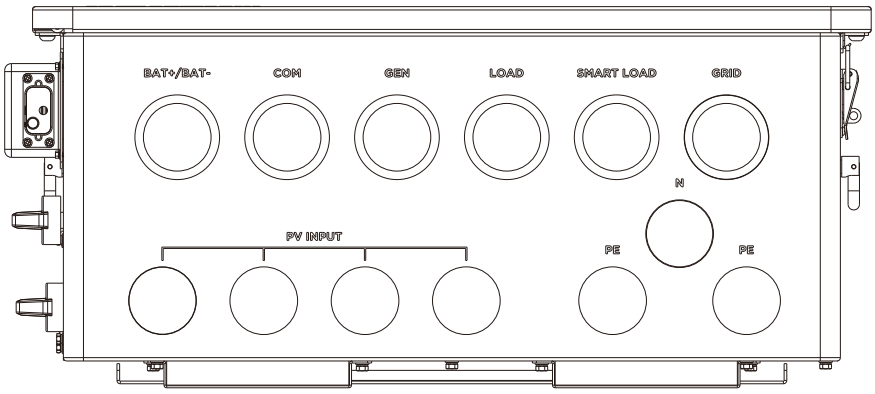

Overview of Terminal Box

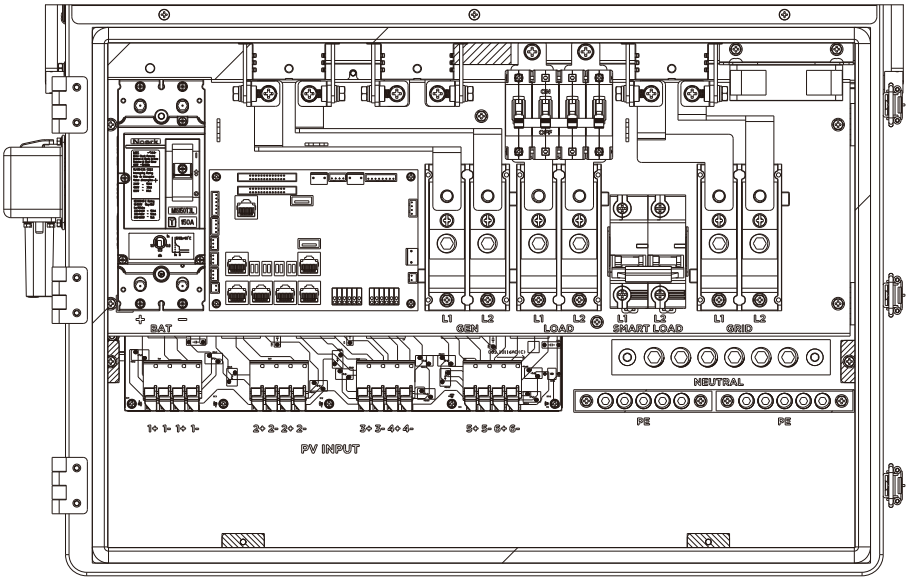

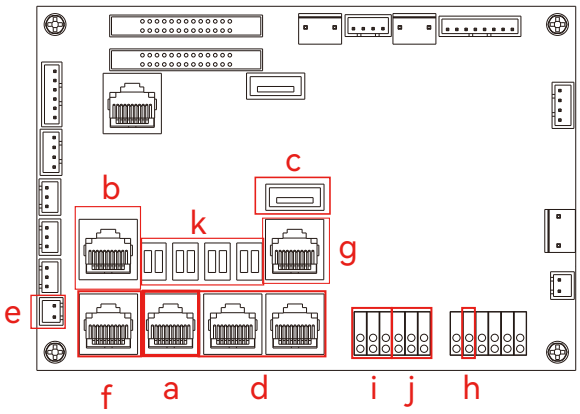

a). Battery communication port (CAN&RS485) please check Chapter 5.6.2 for PIN definition
b).CT Interface: please check Chapter 5.10.1 for CT connection
c). Interface for LCD program upgrading
d). Parallel communication port please check Chapter 5.15 for Parallel connection
e). NTC: Connection for temperature sensor of lead-acidbattery
f). Meter 485B&485A: For Meter communicationg).
g). INV 485/CAN: Communication port
h). RSD power
i). GEN(NO, NC): Connection for generator auto-start function
j). DRY(NO, NC): Reserved
k). Matched resistance DIP: Set DIP switch when use (Left→Right: BAT 485, BAT CAN, Parallel, INV CAN)

5.5 Wiring Preparation

NOTICE

- Before performing any wiring operations, remove the cover of the wiring compartment.
- Only the two screws indicated by the red boxes in the diagram need to be loosened. Please keep the removed screws properly to prevent loss.
- After completing all wiring connections, reinstall the cover and secure it firmly with the screws to ensure proper protection and safety.

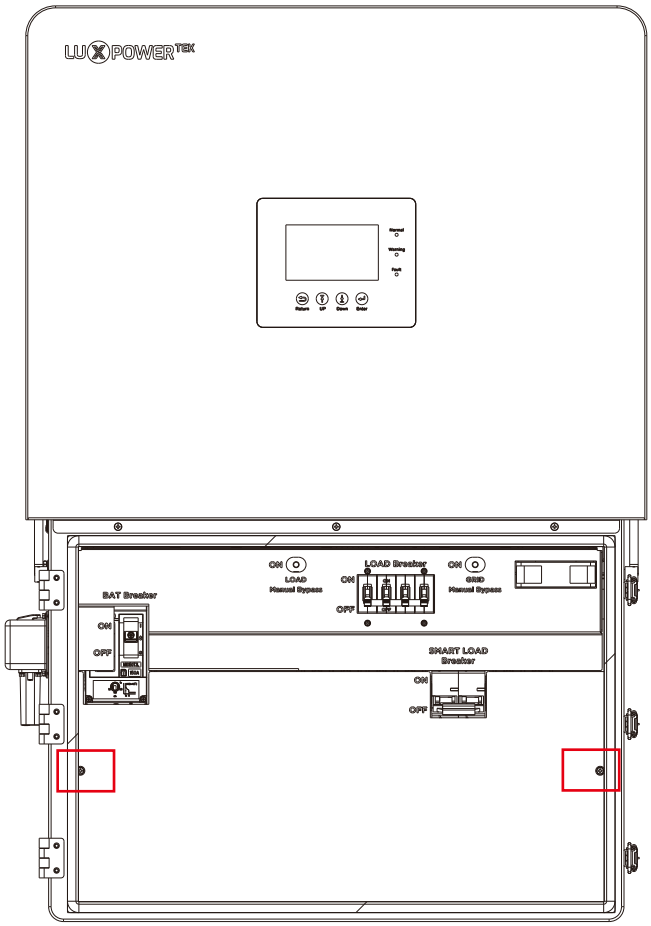

5.6 Battery Connection

NOTICE

- The cable insulation rating should not be lower than 90 ℃.
- Keep the cable length as short as possible to reduce voltage drop.
- The wiring sequence should be: connect the positive (+) terminal first, then the negative (−) terminal. Polarity must be strictly observed during wiring.
- All terminals must be tightened according to the recommended torque to avoid overheating caused by poor contact.
- Use extreme caution when working with metal tools around batteries. Dropped tools may cause sparks, short circuits, or even explosions.
- Put the built-in battery breaker in the off position before connecting or disconnecting batteries.

5.6.1 Battery power cable connection

Cable Requirement:

Model	Cable Size	Minimum Voltage	Torque for cable connection
GEN-HB-US 25K	2-1/0 AWG(35-50mm²)	600V	9-18(N·m)

Wiring Procedures:

Step 1. Select appropriate battery cables and ensure the connectors are compatible with the battery terminals.

Step 2. Strip 3/5~4/5 inch(15-20mm) insulation from the cable end and crimp Tube terminal for the cable ends.

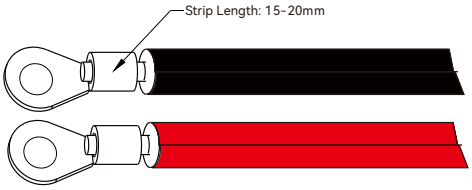

Step 2. Route the battery power cable, connect positive to BAT+, negative to BAT-.

Step 3. Secure the conduit fitting to the enclosure using the counter nut.

Step 4. Fasten the OT rings of battery positive and negative cables to the lugs according to the markings.

Step 5. Fix the cable gland in place.

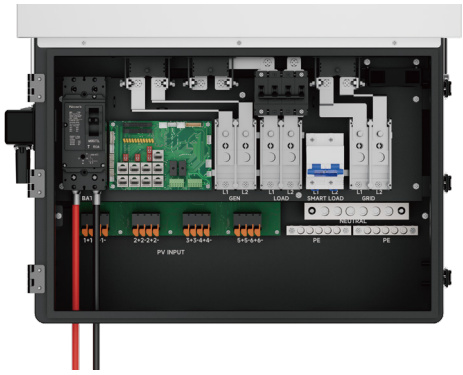

5.6.2 Battery communication cable connection

Correct battery communication cable must be used to connect the battery to the inverter when users choose lithium-ion battery type. Please select 'Lead-acid' type if the lithium battery can not communicate with the inverter. The battery communication port on inverter is an RJ45 socket, Pin for the Rj45 plug of the communication cable is as below. Make the communication cable according to the below inverter Pin and the correct pinout of communication port on battery. The inverter supports both CAN and RS485 communication.

Pin	Description
1	BAT RS485 B
2	BAT RS485 A
3	NC
4	BAT CAN H
5	BAT CAN L
6	NC
7	NC
8	NC

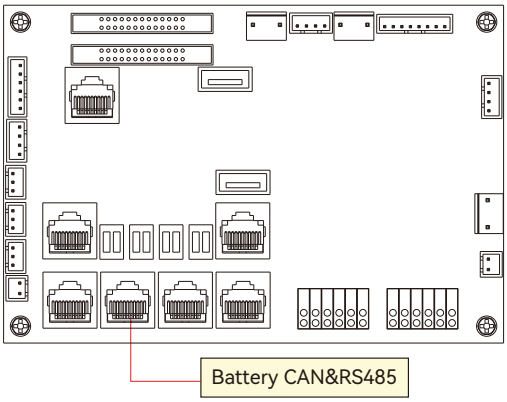

After battery power cable and communication cable connection, users need to enter Advanced settings and choose Battery type and brand on the inverter LCD. After you choose the right battery protocol, the communication will be built in 1-2 minutes.

NOTICE

For Lithium-ion battery

- Please make sure the lithium-ion battery to be used is compatible with inverters. Please contact your distributor for an updated battery compatible list.
- If you are using multiple battery modules with the inverter, the inverter communication cable must be connected to the primary battery. Please check with your battery supplier for battery primary and subordinate settings.

  Customers can refer to Annex2 for detail Lithium Brand definition.

For Lead-acid battery

- The temperature sensor for the lead-acid battery is optional. If you need it, please contact the distributor for purchasing.
- There are three stages for lead-acid battery charging. For charging/discharge related parameters, please check the charge/discharge settings page.

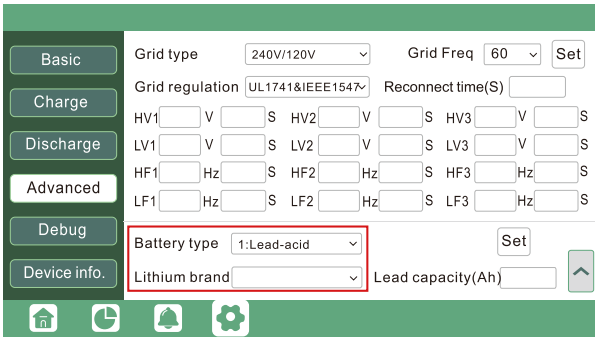

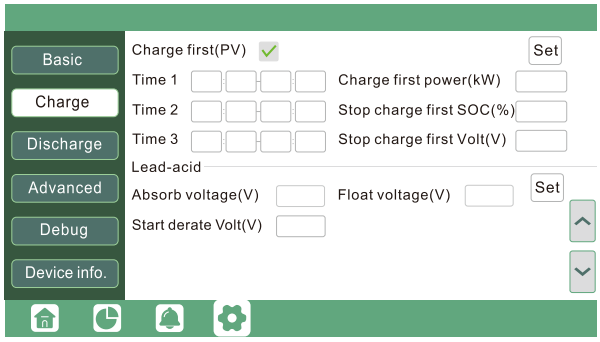

5.7 PE Wire Connection

To ensure electrical safety and reliable system grounding, the inverter chassis grounding must be completed before any other wiring operations.

Wire Color: PE wire – yellow/green

Model	PE Gauge	Cable Size (mm^2)	Torque (N·m)
GEN-HB-US 25K	6AWG	13.3 mm^2	2.0 N·m

Operating Procedures:

Step 1: Prepare the grounding wire:
Use a 6 AWG (13.3 mm^2) copper grounding wire and strip approximately 10 mm of insulation.

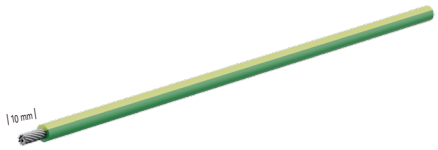

Step 2: Crimp the wire end:
Use a crimping tool to ensure the wire strands are tightly compacted — no loose or frayed strands.

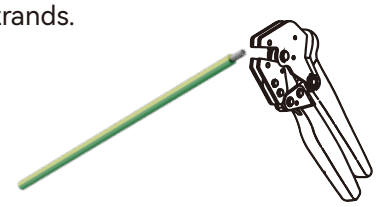

Step 3: Connect to the grounding terminal:
Insert the crimped end into the PE aluminum grounding bar inside the inverter wiring box and fasten it securely with screws to ensure a solid, reliable connection.

Step 4: Verify grounding integrity:
Confirm that the grounding wire is firmly secured to the grounding bar and properly connected to the grounding network.

NOTICE

- When using multiple inverters in parallel, all chassis ground cables must be connected to the same grounding point to avoid potential voltage differences.
- Each AC interface (e.g., Grid, Load, Gen) must have an independent PE grounding wire connected to the grounding bar.
- Sharing a single PE wire among multiple AC interfaces is strictly prohibited, as it may cause fault current backflow or excessive grounding impedance.
- If local standards require equipotential bonding, use a dedicated grounding busbar to connect PV module frames, racks, and other components accordingly.

⚠ WARNING: Improper grounding may cause electric shock hazards or equipment malfunction. Always comply with local electrical codes and standards.

5.8 AC Cable Connection

CAUTION

- The AC terminals are divided into IN (input) and OUT (output). Do not connect them incorrectly. (**Input port**: Grid and GEN; **Output port**: Load and Smart Load)
- Ensure that L1, L2, and N are wired with the correct polarity. Reversed wiring may cause a short circuit, especially during parallel operation.
- Before performing AC input/output wiring, make sure the AC power is completely disconnected to avoid the risk of electric shock.
- Use a multimeter to verify that the AC voltage is 0 Vac before proceeding.
- Before connecting the inverter to the grid, approval must be obtained from the local utility company in accordance with national and regional grid-connection regulations.

The Load Port must not be connected to any type of transformer:

- Connecting a transformer may cause abnormal operation of the inverter's internal circuits, potentially leading to overload, damage, or safety hazards.
- Only connect household appliances or loads within the rated power.
- For extended applications, strictly follow the official installation guidelines and consult technical support.

Cable Requirement:

Current	Cross-section	Cable Diameter	Minimum Voltage	Torque for cable connection
200A	3/0 AWG(85mm²)	10.4mm	600V	18(N·m)

Cable Color:

Live (L1): Brown or Black **Live (L2): Red** **Neutral (N): Grey**

5.8.1 Grid Connection

5.8.1.1 Grid type and regulation selection

The inverter can be used with 120/240V split-phase,120/208V split-phase.

The inverter has passed the main grid-connection regulations in the US (IEEE1547, CA Rule 21, HECO Rule 14H, etc.). If grid is connected to the Inverter, make sure the grid settings are set correctly. Users can choose different Grid Type and regulation in Advanced program on LCD as below:

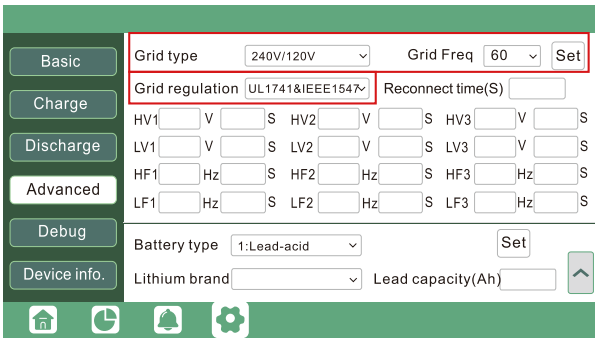

5.8.1.2 Grid Port Connection

Wiring Procedures

Step 1: Before wiring, make sure that all AC breakers or isolators are turned off.
Step 2: Strip approximately 10–15 mm (2/5–3/5 inch) of insulation from each conductor.

Step 3: Crimp the stripped ends firmly using an appropriate crimping tool.

Step 4: Loosen the terminal bolts and insert the crimped L1, L2 and N wires into the corresponding Grid terminals according to the polarity labels, and secure them with an Allen key.

Step 5: Tighten the terminal screws to the recommended torque (18 N·m).
Step 6: Verify that all wires are securely fastened and cannot loosen.
Step 7: Ensure that all wires are properly positioned and securely fixed within the Grid ports.

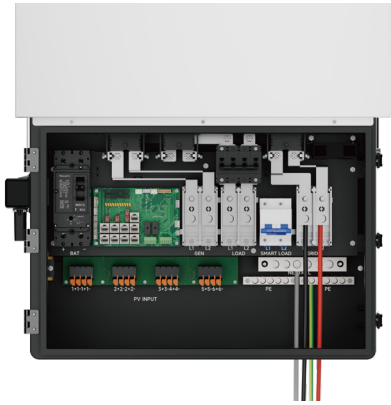

NOTICE

Input Side (Grid): The AC input side must be connected to the utility grid through a circuit breaker.

5.8.1.3 Connection for split-phase service

Connection diagram for 120/240V is as below. The connection diagram for 120/208V split phase service is roughly the same except that generator is not supported.

The inverter can be connected to the load side of the service disconnecting means if the busbar rating in the main panel can meet the NEC705. 12(B)(3) requirements. Otherwise, a Line side connection can be made to avoid an expensive main panel upgrade.

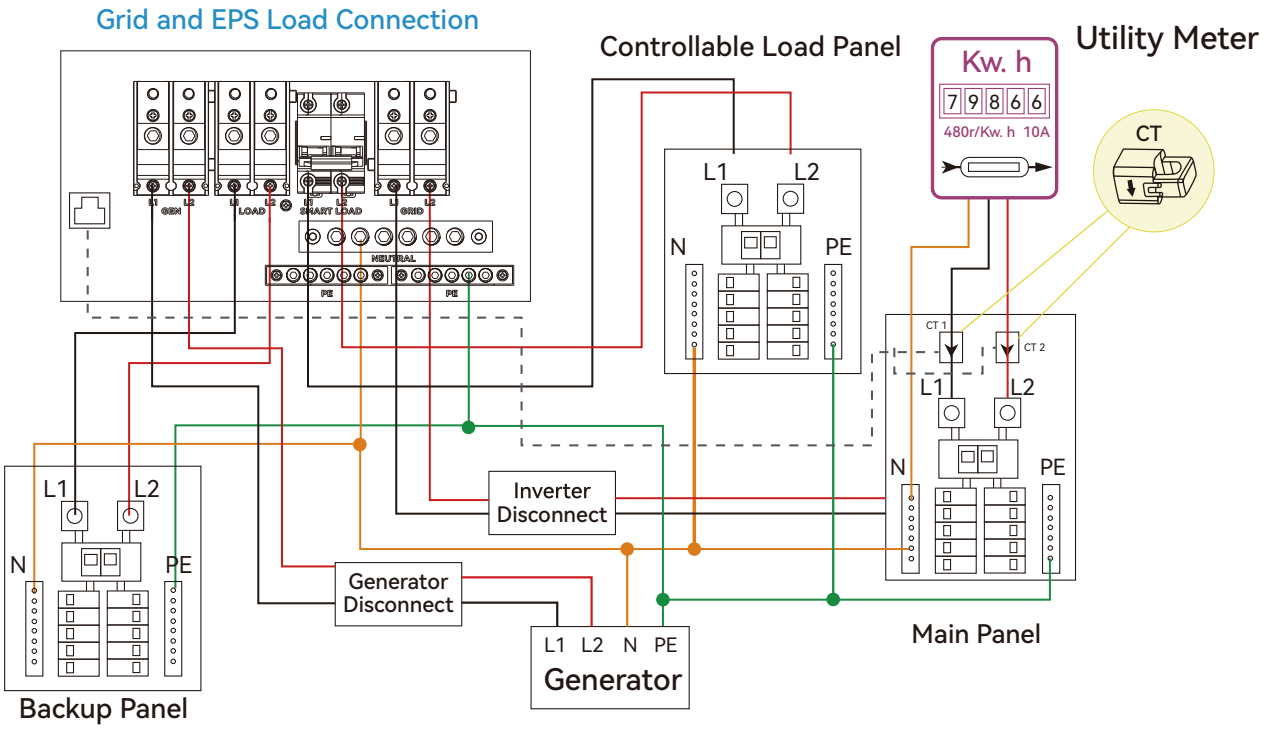

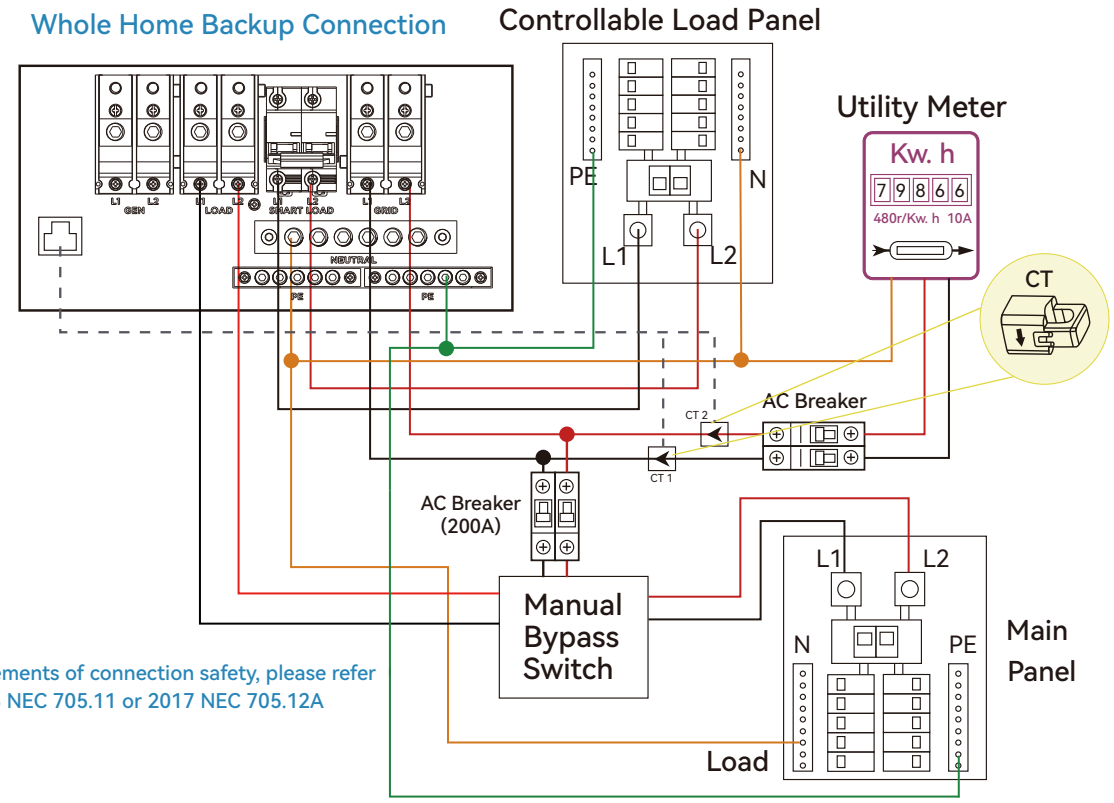

For requirements of connection safety, please refer 2020/2023 NEC 705.11 or 2017 NEC 705.12A

5.8.2 Load Connection

⚠ WARNING

- Put the built-in load breaker in the on position before providing power to EPS load.
- The Load port wire must be sized to the breaker (OCPD) of the circuit.
  a. to the inverter's 200A Load Breaker
  b. or if the backup panel has a main breaker, sized to that breaker's amps.
  c. or for paralleled multiple inverter configurations,there should be a load-side inverter combiner panel and the wire sized to its breaker's amps.

Wiring Procedures

Step 1: Before wiring, make sure that all AC breakers or isolators are turned off.
Step 2: Strip approximately 10–15 mm (2/5–3/5 inch) mm of insulation from each conductor.

Step 3: Crimp the stripped ends using a wire crimping tool.

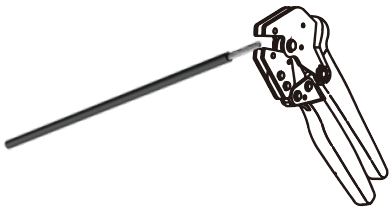

Step 4: Loosen the terminal bolts and insert the crimped L and N wires into the corresponding Load terminals according to the polarity labels. Ensure that the L1, L2 and N phase sequence is correct and not reversed.

Step 5: Tighten the terminal screws to the recommended torque (12 N·m).
Step 6: Ensure all connections are firmly secured to prevent loosening.

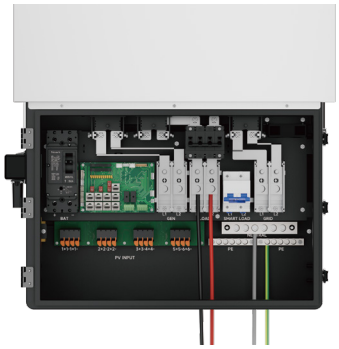

5.9 PV Connection

The PV connection of this hybrid inverter is the same as that a traditional on-grid solar inverter (string inverter).

Cable Requirement:

Model	Cable Size	Minimum Voltage
GEN-HB-US 25K	10-8AWG(5-8mm²)	600V

⚠ WARNING

- Please double check the lowest ambient temperature of the installation location. The rated Voc on solar panel nameplate is obtained at 25℃. As the ambient temperature drops, the Solal panel Voc increases. Please ensure the Maximum solar string voltage corrected at the lowest temperature does not exceed the inverter's maximum input voltage of 550V.
- Do not connect PV modules that may pose a leakage risk to the inverter. For example, grounded PV modules can cause inverter leakage. Ensure that the PV+ and PV− terminals of the PV array are not connected to the system grounding bar.
- It is strongly recommended to use a PV combiner box with surge protection. Without it, lightning strikes may damage the inverter.
- A dedicated DC circuit breaker (1500 V / 50 A) must be installed between the PV modules and the inverter.
- Cables must be UV-resistant, double-insulated, and designed for outdoor PV applications.
- Ensure that cable voltage drop does not exceed 2%. If the cable length is too long, increase the conductor size accordingly.
- It is strongly recommended to install a DC isolator switch compliant with IEC 60947-3 or equivalent standards to enhance operational safety.

NOTICE

- The inverters have six MPPTs. For MPPT1 MPPT2, users can connect two strings. For MPPT3 and MPPT4 MPPT5 MPPT6 users can connect one string.
- When users connect 2 strings to MPPT1 MPPT2, make sure the two strings have the same quantity of solar panels. The inverter will limit the total MPPT1 / MPPT2 / MPPT3 / MPPT4 / MPPT5 / MPPT6 input current to 34A/34A/17A/17A/17A/17A automatically.
- The inverter will limit the max solar input power to 48kW total.

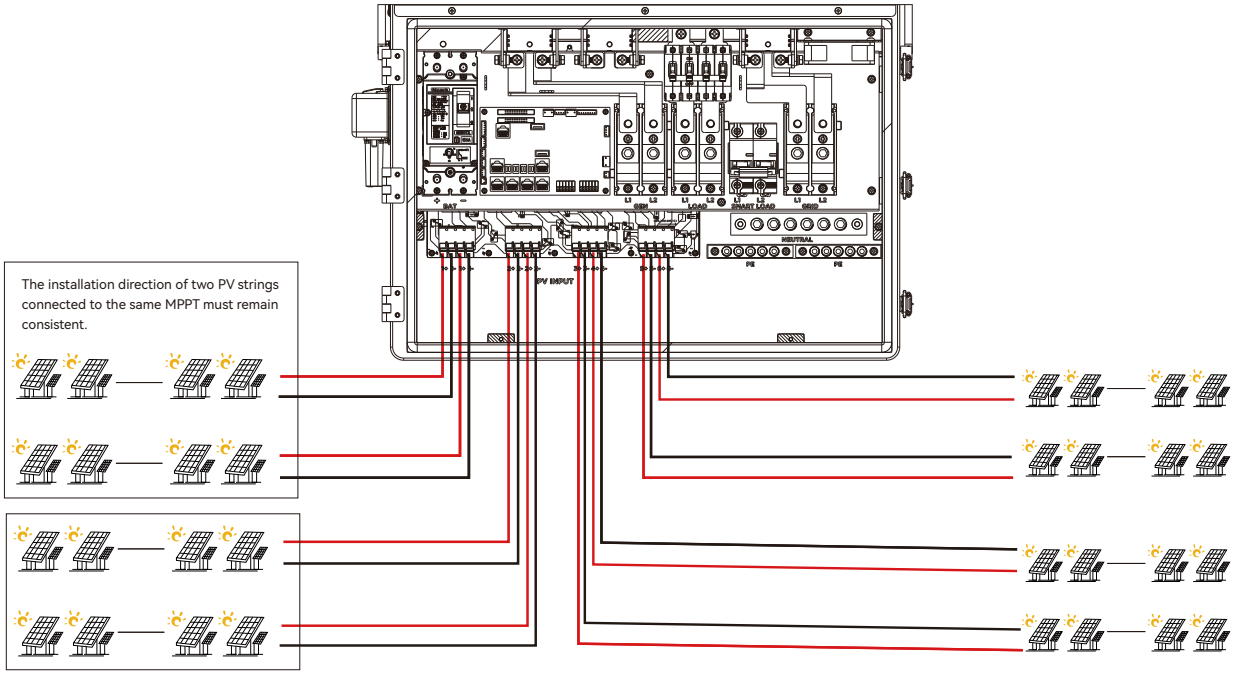

Wiring Procedures

Step 1: Strip approximately 6-8 mm (1/4-5/16 inch) of insulation from the positive and negative conductors.

Step 2: Use a crimping tool to firmly crimp the wire ends, ensuring the strands are tightly compacted, with no loose or frayed wires.

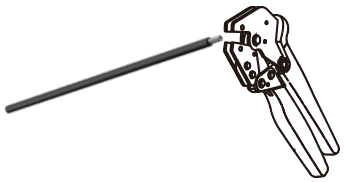

Step 3: Connect the positive (+) cable of the PV module to the positive (+) terminal of the inverter's PV input, and the negative (−) cable to the negative (−) terminal of the inverter's PV input. Finally, close the orange switch.

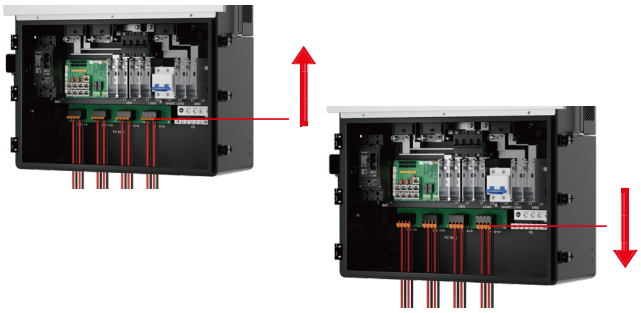

Step 4: Verify that all connections are secure and cannot loosen.

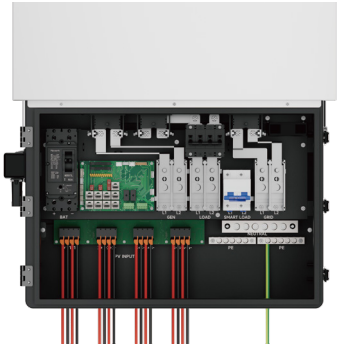

5.10 CT Connection

WARNING

- Before connecting any AC cables or current transformers (CTs), ensure that all AC cables are completely isolated from the AC power supply to avoid the risk of electric shock.

Installation and Wiring Requirements

- This device uses a one-to-two CT configuration. Each inverter is equipped with two CTs, installed on the L1 and L2 phase lines to measure dual-phase current.
- Do not install CTs on the neutral (N) or protective earth (PE) lines.
- When installing the CT, ensure that it is correctly wired to the corresponding phase according to the labels.
- Do not install CTs on uninsulated conductors.
- The CT signal cables included in the accessory kit are 5 meters. If the installation location is farther away, it is recommended to use an external meter for power measurement to ensure data stability and accuracy.
- After wiring, it is recommended to secure the CT clamps and cables with insulating tape or cable ties to prevent loosening or detachment.

5.10.1 CT Port Pin Definition

The CT interface for 2 CTs connection is an Rj45 port, we have made an RJ45 plug on those 2 CTs in advance, so you can connect it to the port directly.

Pin	Description
1-4	Reserved
5	CT2N
6	CT2P
7	CT1N
8	CT1P

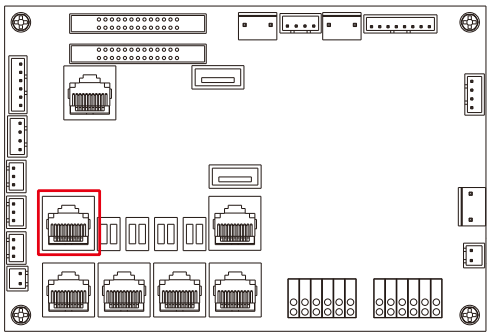

Please refer to the connection diagram for the correct positions of CTs and clamp the 2 CTs on the L1 and L2 wires at the service entry point in the main service panel. CT1 (label L1) should go to L1 and CT2 (label L2) should go to L2. The arrow on the CT is pointing to the inverter. (*** Incorrectly install CT will cause the Display to show incorrect informations and features of the inverter will not function correctly). If the CT are in a wrong direction, there is an option you can change the direction of the CT on your inverter call: CT Direction Reversed (Only for Direction not CT1 or CT2 Placement) in Advanced Tab. You would not need to go change it physically.

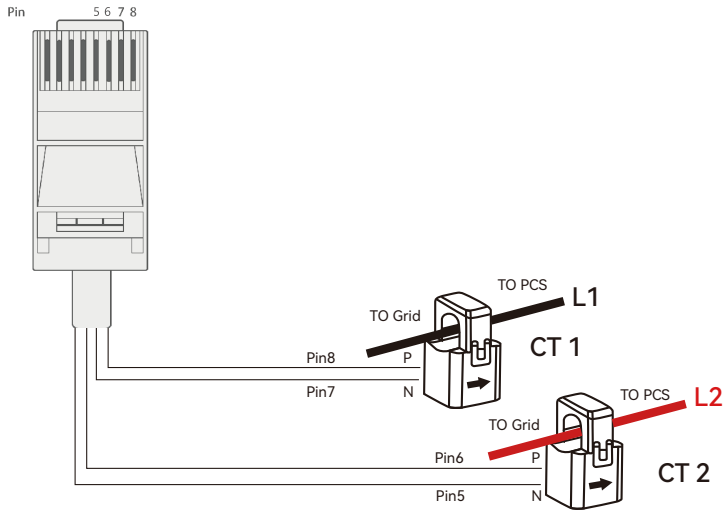

5.10.2 CT Clamp Ratio

The inverter support 3 ratios of CT clamp 1000:1, 2000:1 and 3000:1. The CT ratio of the CTs in the accessory bag is 3000:1. If you are using a 3rd party CT, please ensure the CT ratio is one of them, and select the correct CT ratio setting in the inverter monitor page or on the inverter LCD.

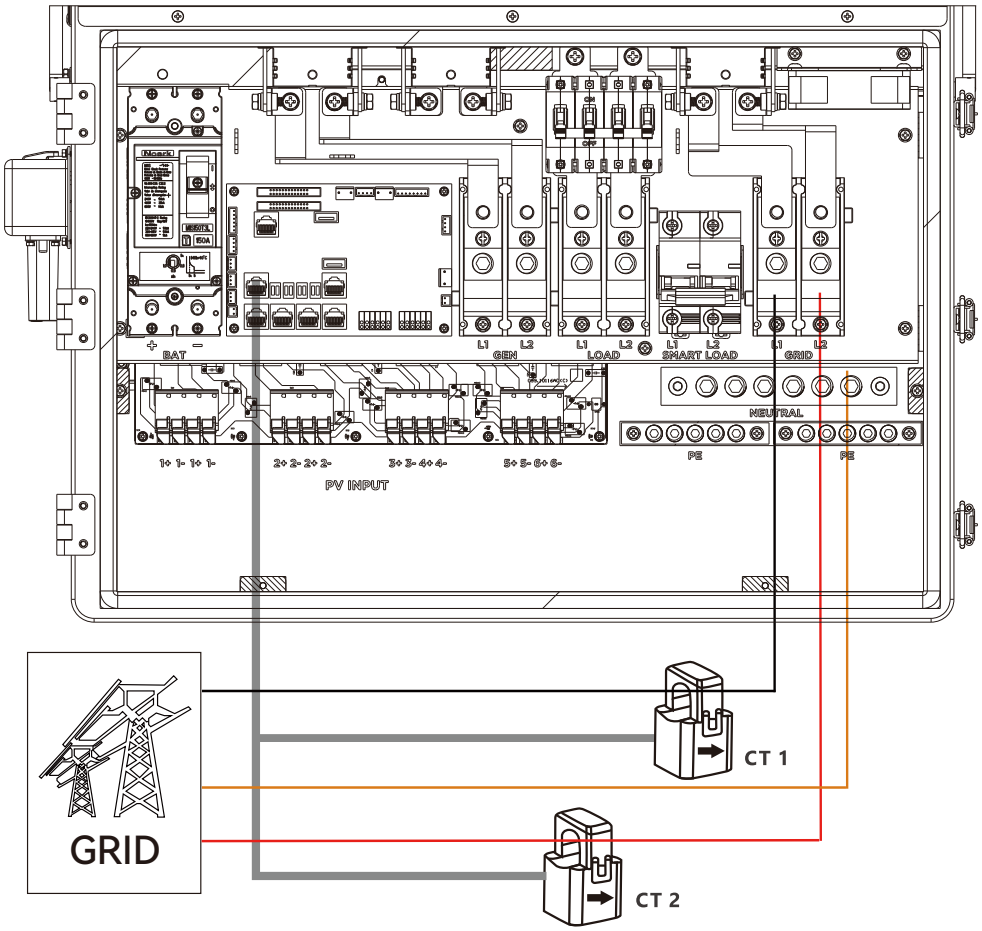

5.11 Meter Connection

CAUTION

- If the Meter State function is enabled but the meter is incorrectly connected or not properly connected, the inverter will report a Meter Check Fault.
- Only use meters authorized or certified by the manufacturer. Using uncertified meters may result in the inverter failing to recognize the meter, communication errors, or damage.
- The manufacturer is not responsible for any consequences caused by using unauthorized third-party meters or devices.

Meter Connection Instructions

To monitor power flow to and from the grid, a three-phase energy meter should be installed near the main distribution panel or the incoming line. Each inverter is equipped with Meter communication ports: 485A / 485B for communication with the meter.

Operating Procedures

Step 1. Connect the communication cables to the inverter's Meter 485A and 485B ports according to the wiring definitions provided by the meter manufacturer.
Step 2. Ensure the meter orientation is correct (Grid Side → Load Side).
Step 3. Power on the system and enable the Meter State function in the inverter menu.
Step 4. If communication is successful, the system will automatically detect power flow and display real-time power data.

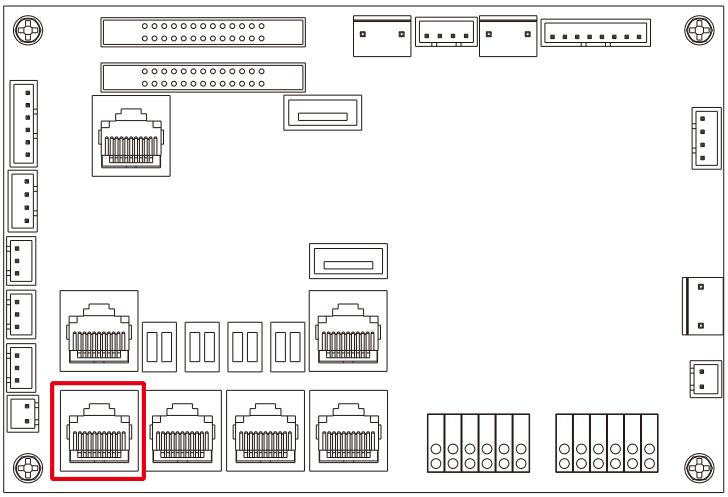

Pin	Description
1	485B
2	485A

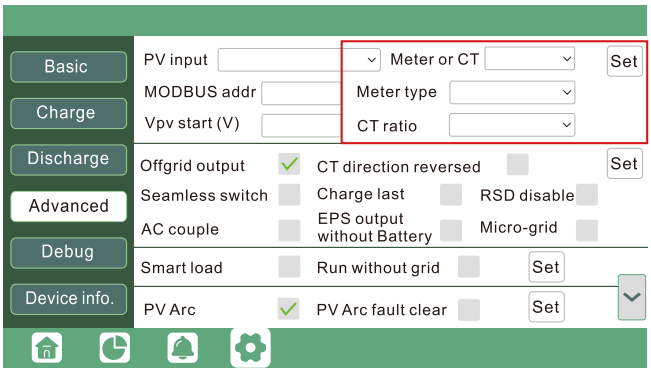

5.12 GEN Port Function

NOTICE

- The GEN port is strictly reserved for connection to a generator.
- The generator port is equipped with a pass-through relay rated at 200 A. Manual switching of the GEN relay is prohibited. When the generator is running, ensure that the total load current plus battery charging current does not exceed 200 A to prevent overload.

5.12.1 Generator system connection

Generator requirements: the generator should be neutral bonded type, with 240V/120V output at same time, generator capacity should be larger than 25kW.

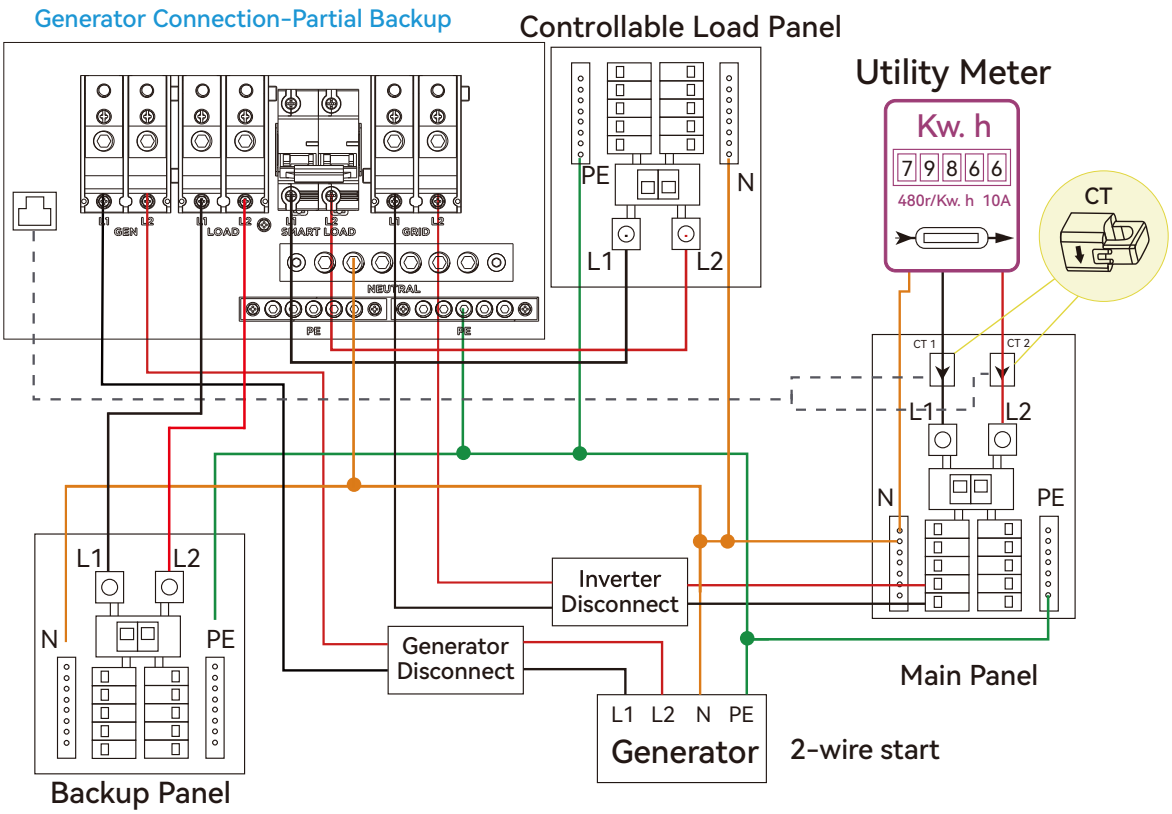

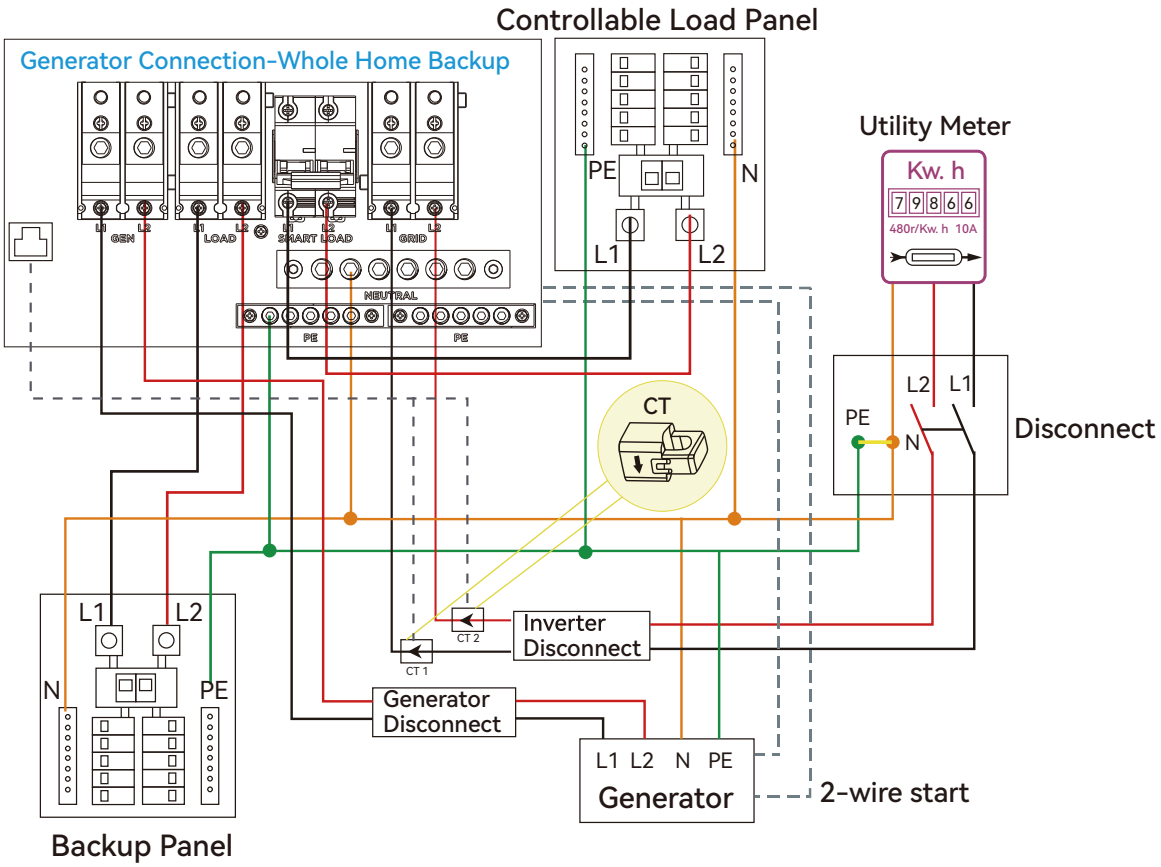

When the generator is started, all the loads connected to EPS Load will be supplied by the generator. Meanwhile the battery will be charged.

The pass-through relay on the generator port is 200A. When the generator is on, please ensure the total load and charge current will not exceed 200A.

The generator start signal shall be connected to the COM board GEN Nominal Open (NO1 and CO1), or Nominal Close (NC1 and CO1) port, if users want to start generator remotely.

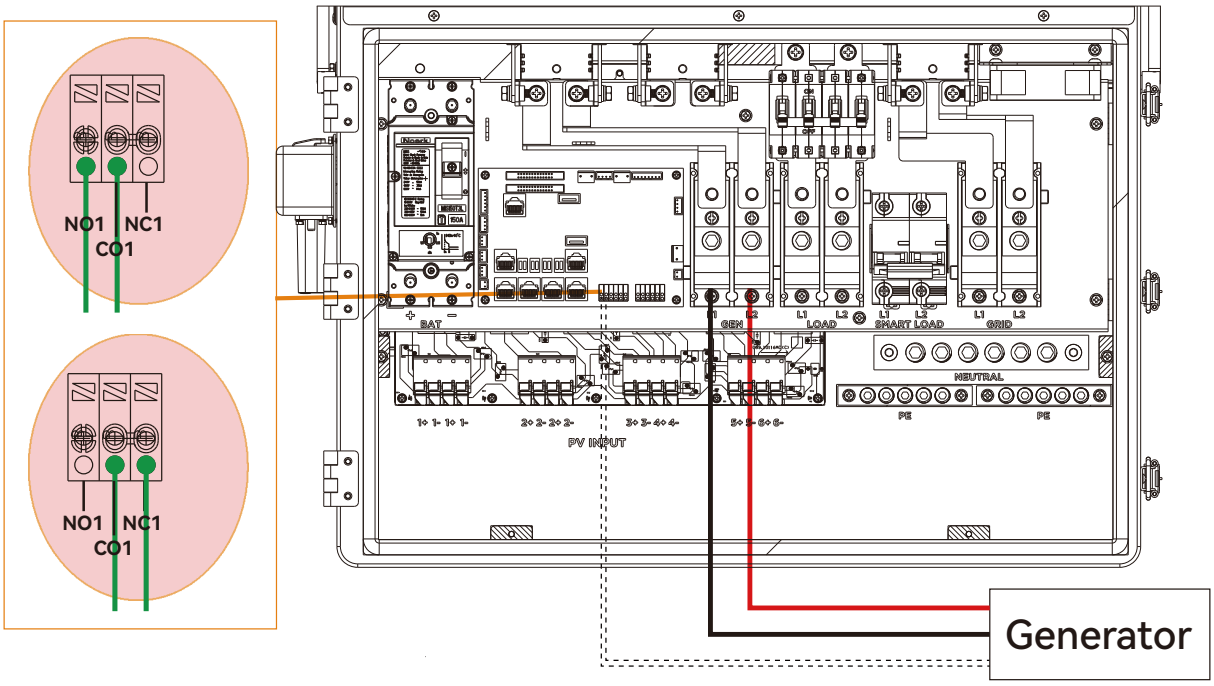

5.12.2 Generator Startup and Stop settings

Whether the generator starts or stops depends on the selected Battery Operating Mode.

Users can configure the generator charging logic via the monitoring software or the LCD interface:

- By Voltage and Time: Recommended for lead-acid batteries.
- By SOC (State of Charge) and Time: Recommended for lithium batteries.

Configurable parameters include:

- Generator start/stop voltage or SOC
- Generator charging time 1 and charging time 2
- Maximum charging current
- Generator input power limit

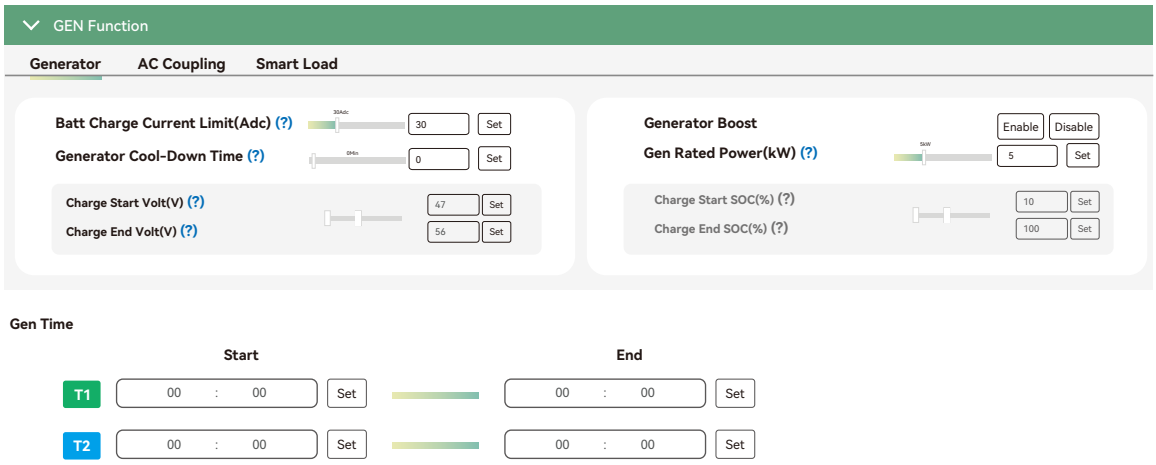

5.12.3 Connect Generator

Wiring Procedures

Step 1: Before performing any wiring, ensure that the inverter (and all parallel inverters, if applicable) is completely powered off, the generator supply is disconnected, and all circuit breakers are in the OFF position to prevent equipment damage.

Step 2: Prepare the generator cables according to Steps 1–3 in Section 5.8.1, then insert the crimped L (Live) and N (Neutral) wires into the corresponding GEN port terminals.

Step 3: Verify that the wires are securely connected and cannot loosen.

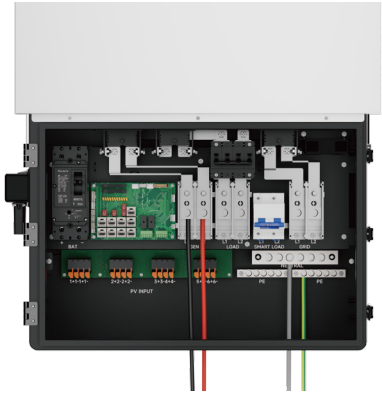

5.13 Smart Load

5.13.1 Function Overview

The Smart Load port can be used for either Smart Load (intelligent load) operation or AC Coupling connection. These two functions cannot be enabled simultaneously.

When the battery is sufficiently charged and solar generation is abundant, the system automatically activates designated loads (such as water heaters or EV chargers) to maximize clean energy utilization and reduce waste.

When the battery charge is low or PV power decreases, the system automatically disconnects the Smart Load to prioritize critical household loads (Essential Loads).

5.13.2 Wiring Instructions

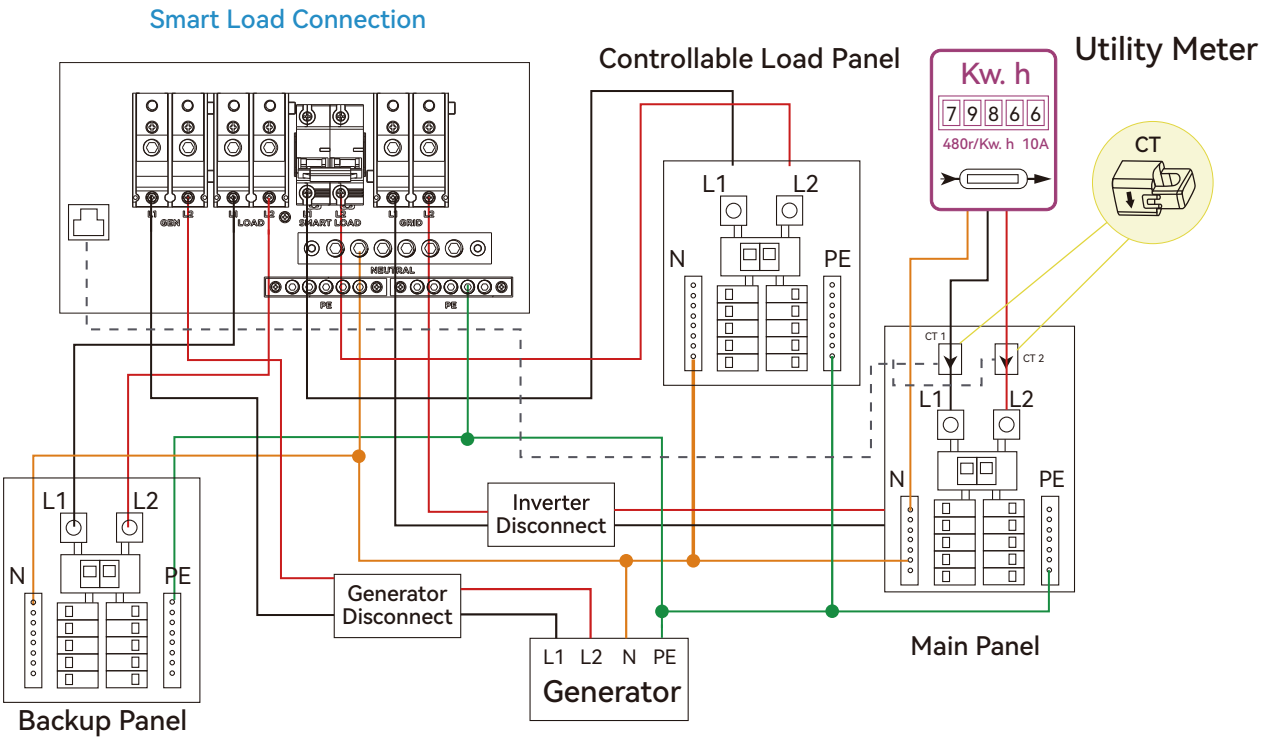

1: Ensure that both the inverter and external loads are powered off, and all circuit breakers are in the OFF position.

2: Identify and connect the Smart Load wiring according to the standard wiring color code:

a.L1 (Live): Brown or black L2 (Live): Red

b.N (Neutral): Grey

c.PE (Ground): Yellow-green

3: 6.Connect the Smart Load L1, L2, and N wires to the corresponding L1, L2, N terminals on the Smart Load port, and connect the load's PE wire to the inverter's grounding terminal.

Cable requirements

Current	Cross-section	Cable Diameter	Minimum Voltage	Torque for cable connection
200A	3/0 AWG(85mm²)	10.4mm	600V	18(N·m)

Wiring Procedure

Step 1: Before wiring, ensure the DC protection switch is turned off.

Step 2: Strip approximately 10 mm of insulation from each conductor.

Step 3: Crimp the stripped ends using a wire crimping tool.

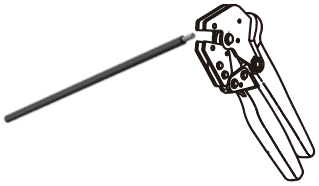

Step 4: Insert the crimped L (Live) and N (Neutral) wires into the corresponding Load terminals.

Step 5: Ensure all connections are firmly secured to prevent loosening.

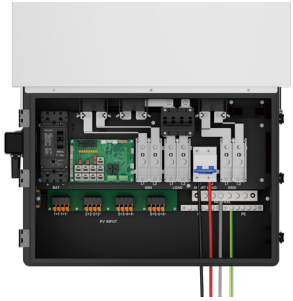

5.13.3 Smart Load Settings

Enable smart load

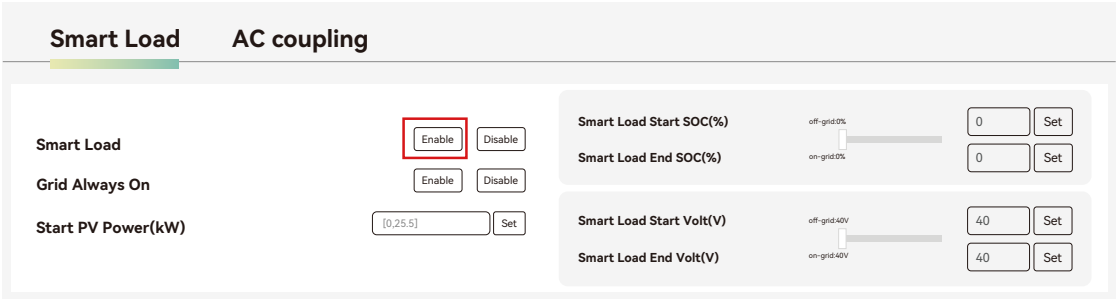

Enable “Grid always on”: When connected to the grid, the smart load remains continuously connected.
Start PV Power: Input the PV power threshold at which you want the smart load to start. You can also input the battery's SOC or voltage to select when to start and stop.
If your home already has an existing grid-tied system, you can connect it to our Smart Load port as an AC power input, transforming your grid-tied system into an energy storage system.

5.13.4 Example applications

- Automatically start a water heater when PV generation is sufficient.
- Enable EV charging after the battery is fully charged.
- Run high-power household appliances during off-peak periods using remaining energy.

5.14 AC Coupling

5.14.1 Function Overview

The AC Coupling function allows users to integrate an existing on-grid inverter system through the Smart Load interface, thereby upgrading the system into a hybrid energy storage system.

- When the utility grid is disconnected, this inverter automatically switches to off-grid mode, maintaining stable system voltage and frequency, and enables the on-grid inverter to continue generating power via the Smart Load interface.
  - When PV power is sufficient, the inverter prioritizes load supply and uses surplus energy to charge the battery.
  - Once the battery is fully charged, the inverter will limit the output power of the on-grid inverter.
  - When PV power is insufficient, both the battery and the on-grid inverter will supply power jointly to ensure uninterrupted operation of critical loads.
- When the utility grid is available, this inverter and the on-grid inverter operate in coordination. Solar energy can simultaneously power loads and charge the battery. When load demand is low or the battery is fully charged, excess energy can be exported to the grid, ensuring optimal energy utilization.

NOTICE

When using AC Coupling, ensure that the system has grid-connection approval and complies with local grid regulations.

5.14.2 Wiring Instructions

Wiring Procedure

Step 1: Ensure that the inverter, the grid-tied inverter, and the grid are all powered off, and that all breakers are in the OFF position.

Step 2: Connect the output terminals of the grid-tied inverter (L1, L2, N, PE) to the corresponding terminals of the Smart Load port:

a.L1 (Live) → Smart Load terminal L1

b.L 2(Live) → Smart Load terminal L2

c.N (Neutral) → Smart Load terminal N

d.PE (Ground) → Inverter grounding terminal

Step 3: It is recommended to install a dedicated circuit breaker in the AC coupling circuit to ensure safe operation.

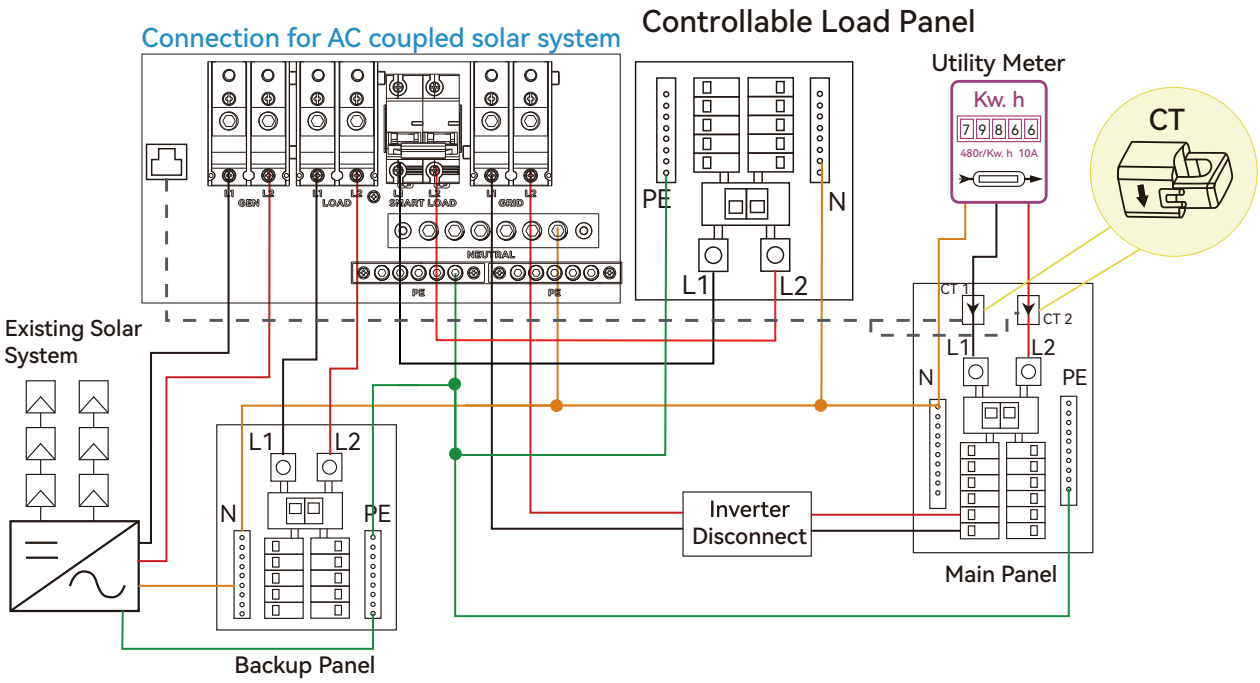

5.14.3 AC Coupling Settings

enable AC Coupling

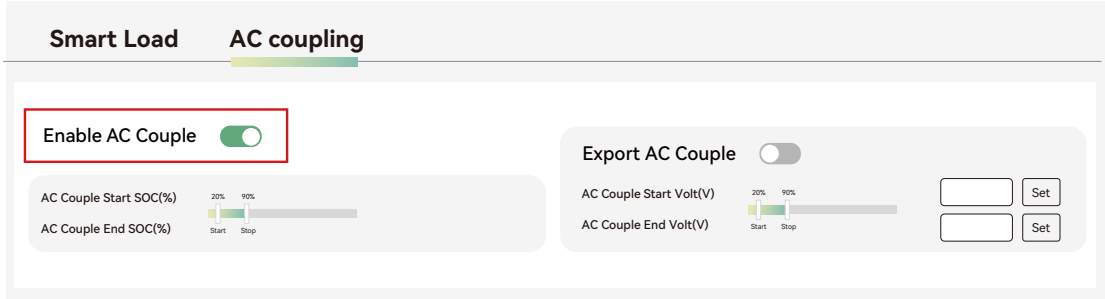

Start Condition: When the battery SOC ≥ the preset “AC Coupling Start Threshold”, the on-grid inverter begins operation. Its output power can be used to charge the battery or supply the load.
Stop Condition: When the battery SOC ≤ the preset “AC Coupling Stop Threshold”, the on-grid inverter stops operating to prevent battery over-discharge.

Recommended Settings:
Start Threshold (SOC): Approximately 50%
Stop Threshold (SOC): Approximately 90%

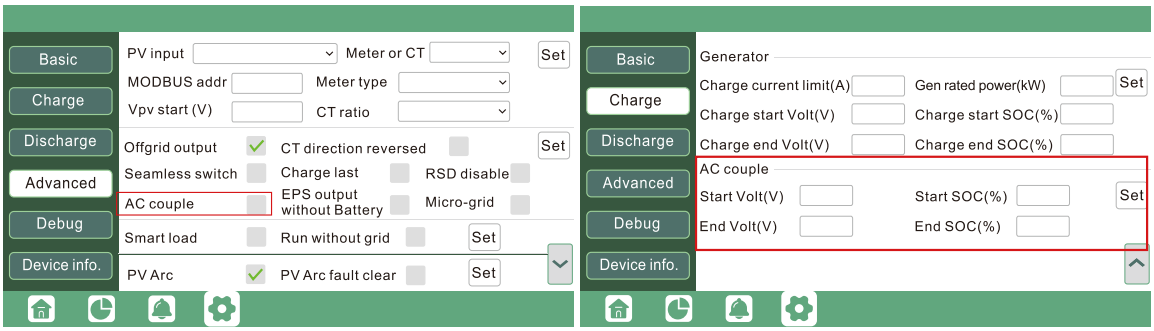

When On-Grid and Export to Grid enabled, the Ac-coupled inverter will always be on, and it will sell any extra power back to the grid. Ensure you are allowed to sell power to your utility provider.
When export to Grid is disabled, the AC-coupled inverter will stay at off mode and could not work at on-grid mode to sell power.

5.14.5 System features

- **Grid-Tied Mode**: The grid-tied inverter continuously operates, feeding PV-generated electricity directly into the grid. Any excess energy can be sold back to the grid.
- **Off-Grid Mode**: The grid-tied inverter operates using a virtual grid signal provided by this inverter. The generated energy can be used to charge the battery or supply loads.
- **Energy Priority**: PV generation supplies the load first. Remaining energy is used to charge the battery. When battery energy is insufficient, the system automatically switches to grid power.

5.15 Parallel System Connection

5.15.1 Connection for paralleling system

The hybrid inverter supports parallel connection to expand power and energy capacity to suit different using scenarios. Up to 6 inverters can be connected in parallel, achieving a total system power of up to 150 kW. Wiring diagram is as below, the manual bypass switch connect loads to EPS panel for default. When inverters fail, users can switch the loads to utility.

a.25KWx3 Parallel system installation connection (3@240V/120V)

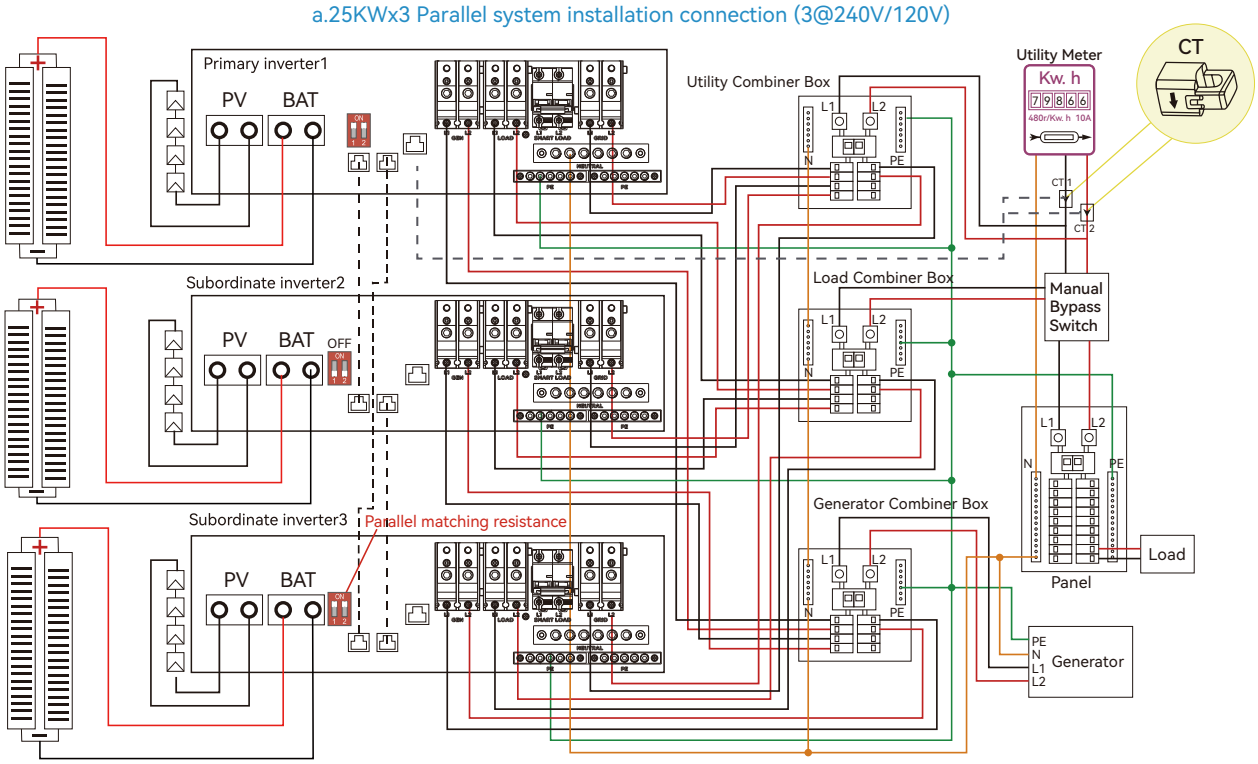

Please put the 2-bit CAN balancing resistor switch to ON status for the first and end inverter of the daisy chain loop.

Grid type setting for each inverter

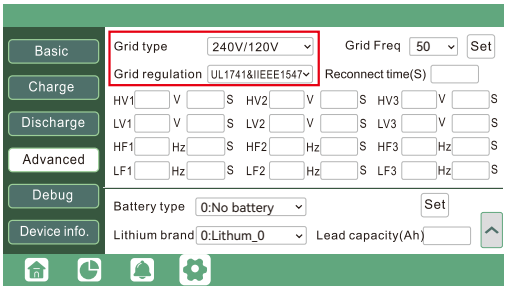

Inv1 setting

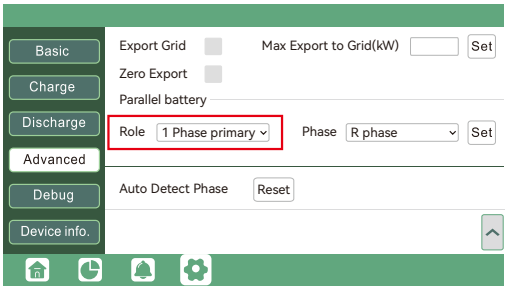

Inv2 setting

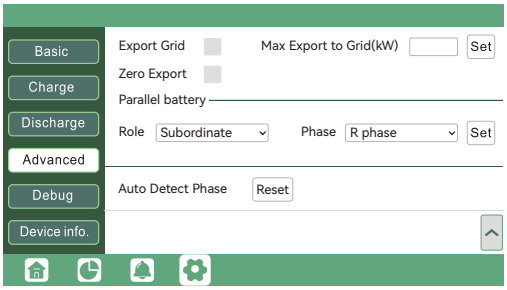

Inv3 setting

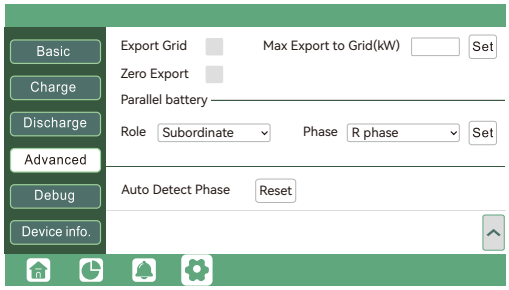

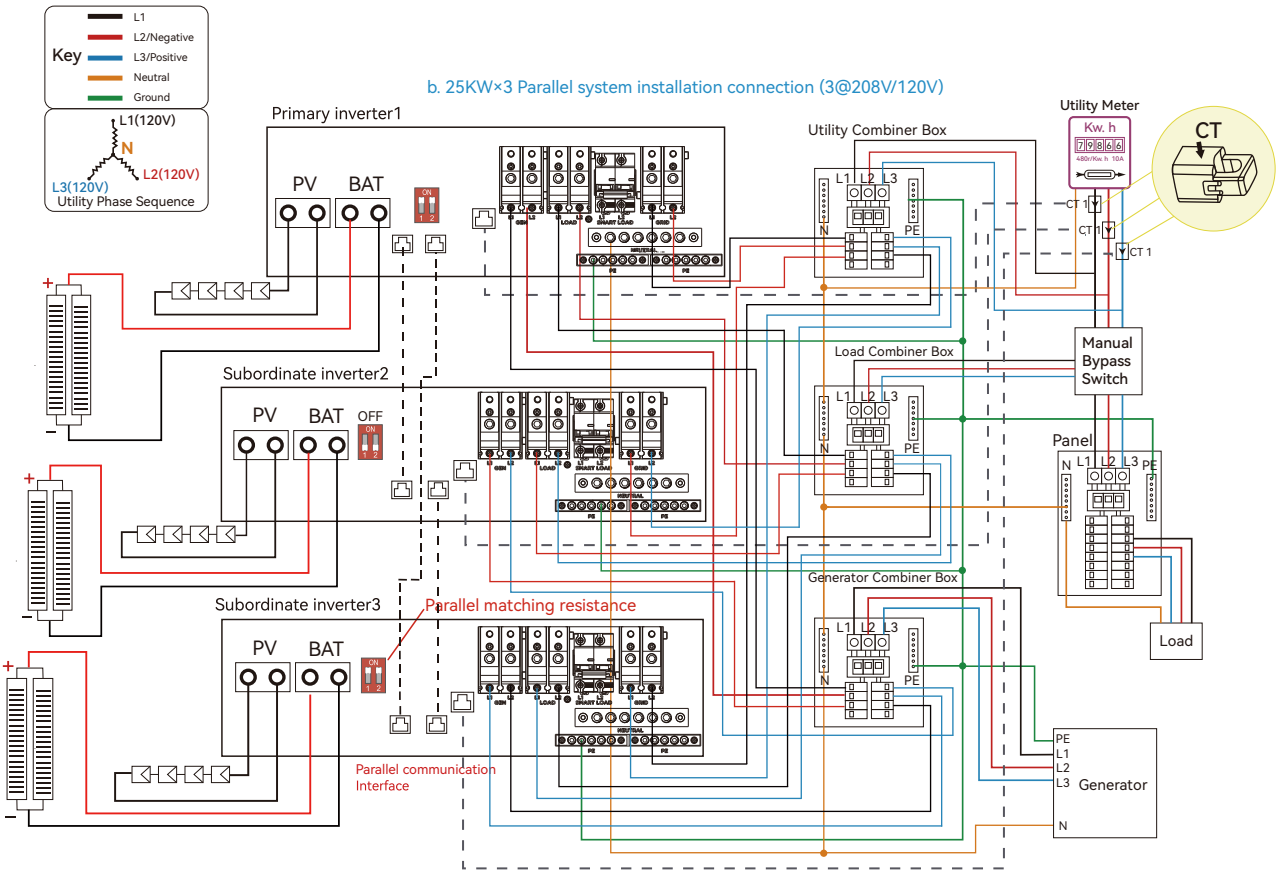

NOTE: For 3@208/120V and 2@208V/120V paralleling system, please contact your inverter supplier for more detailed guidance.

Grid type setting for each inverter

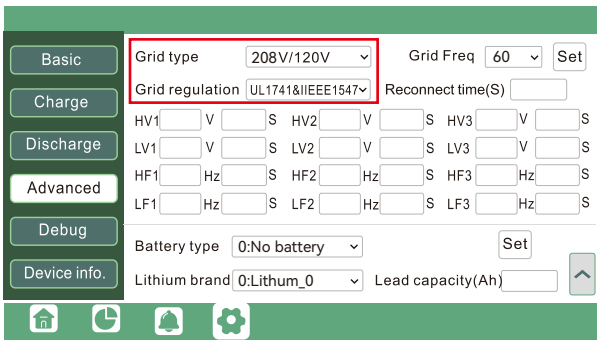

Inv1 setting

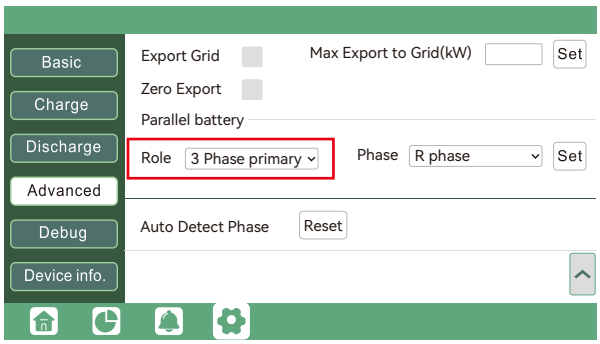

Inv2 setting

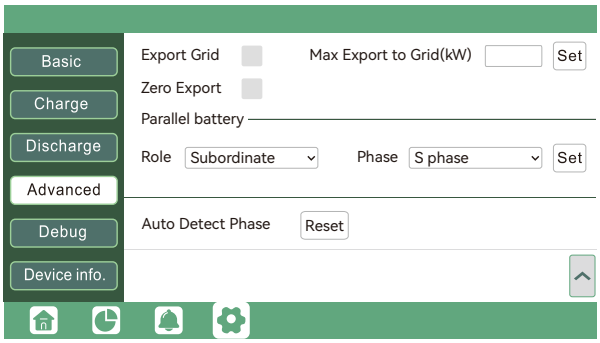

Inv3 setting

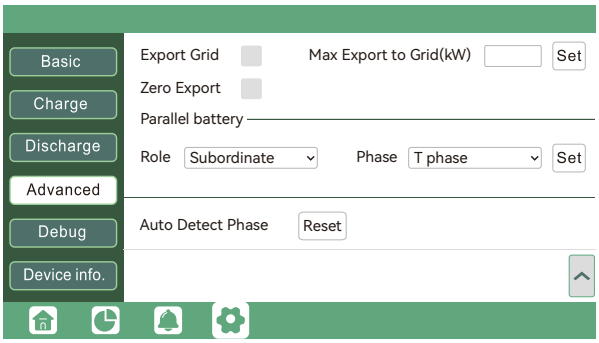

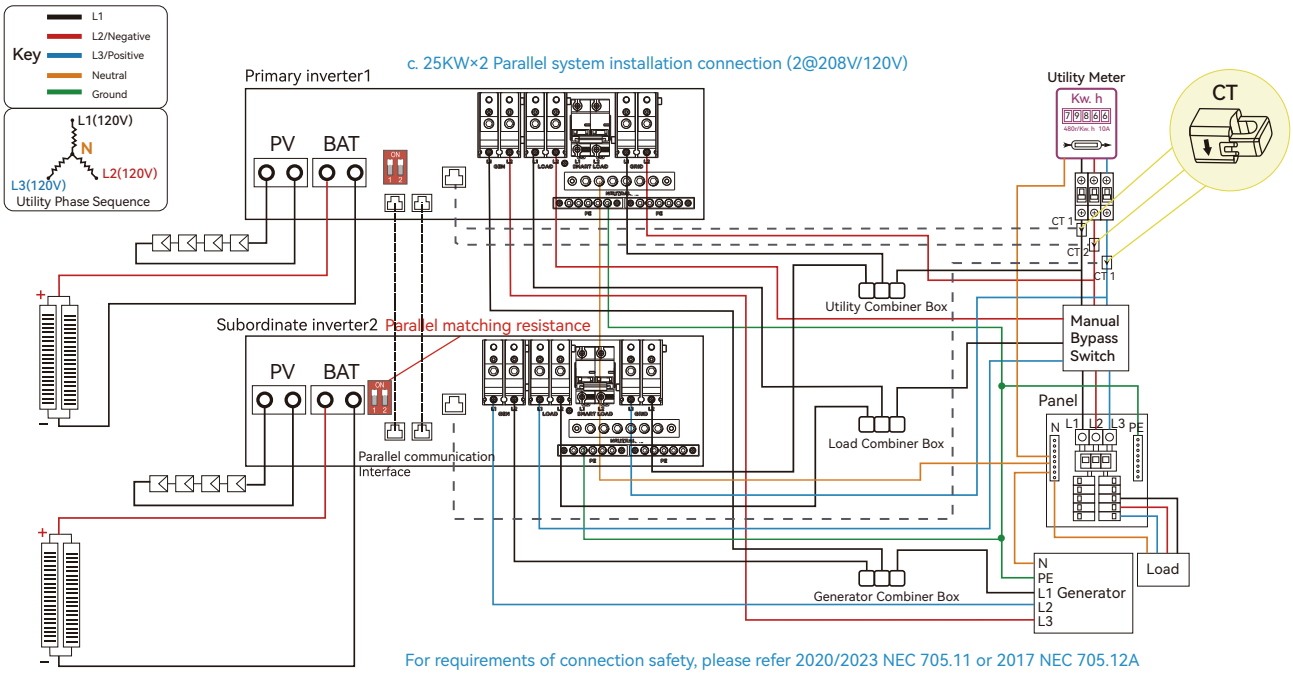

Grid type setting for each inverter

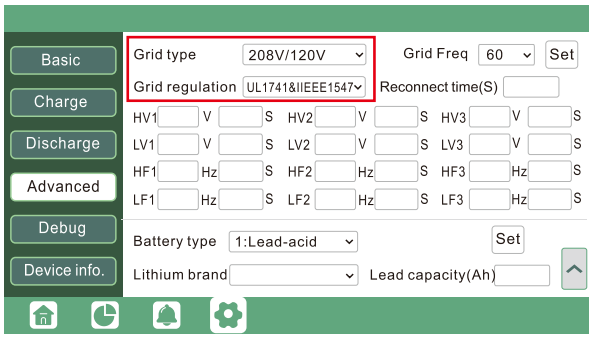

Inv1 setting

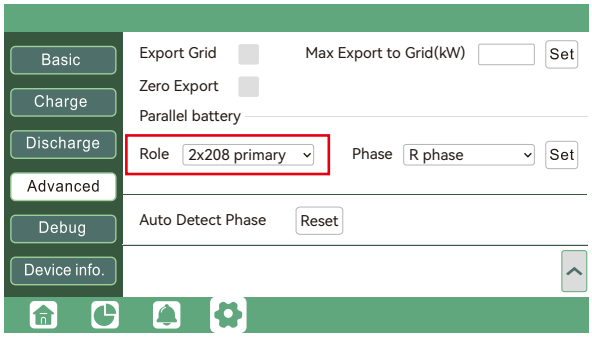

Inv2 setting

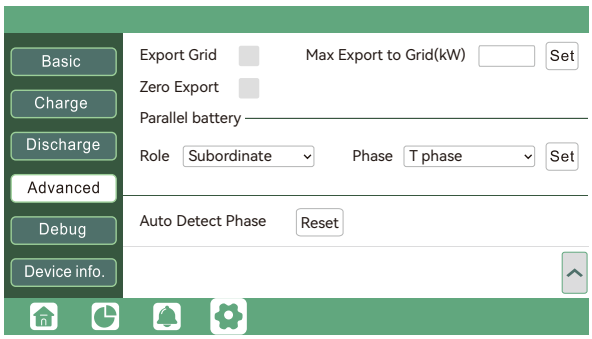

d. 25KW×2 Parallel system installation connection (2@240V/120V)

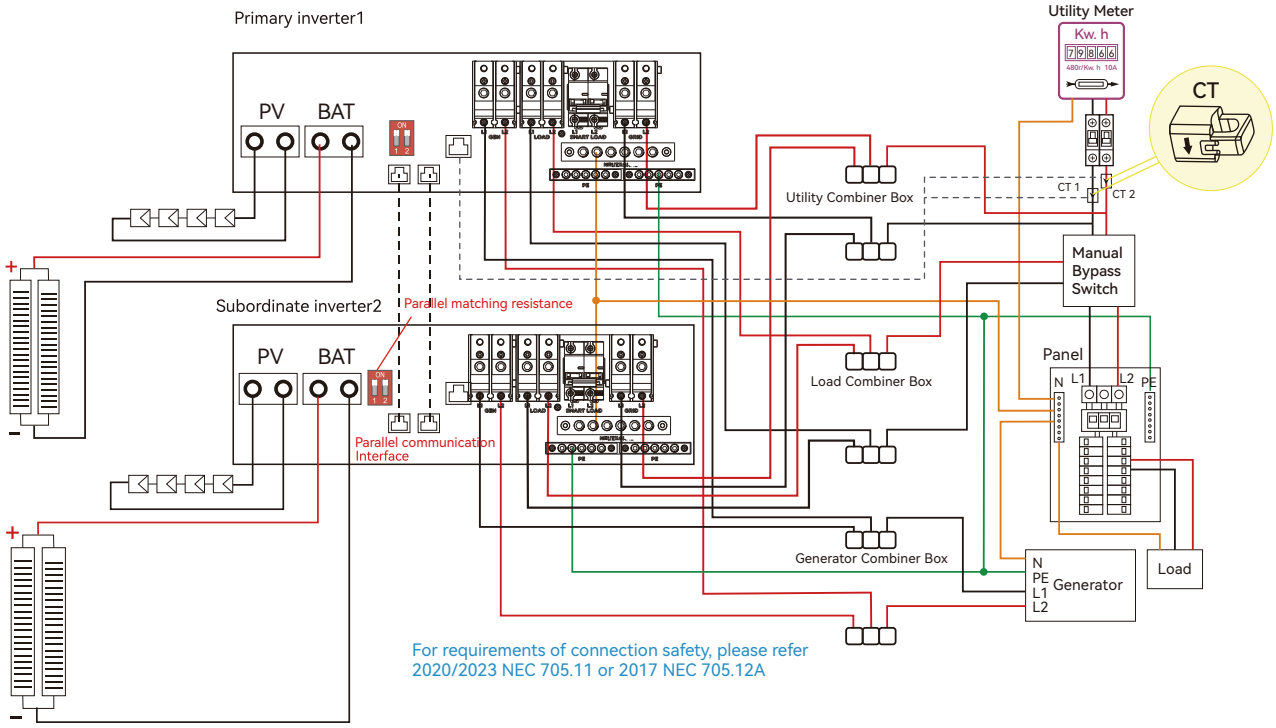

Grid type setting for each inverter

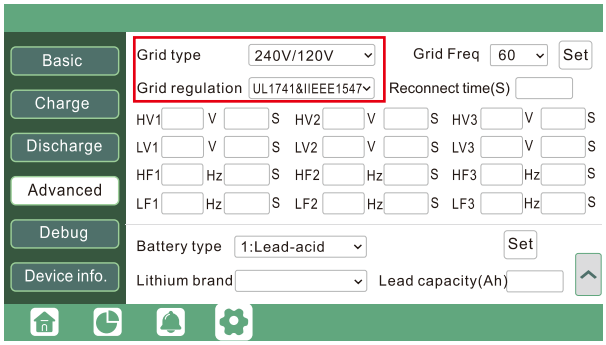

Inv1 setting

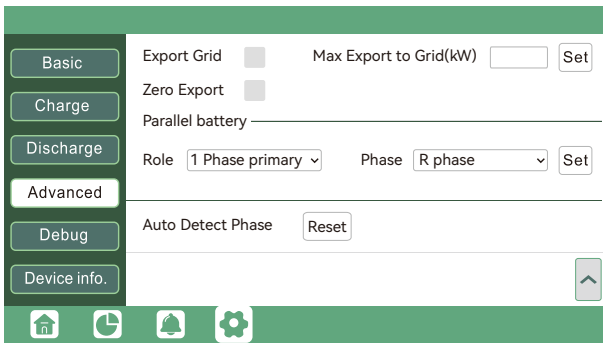

Inv2 setting

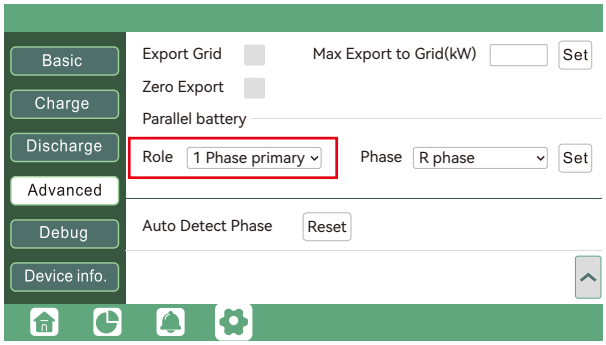

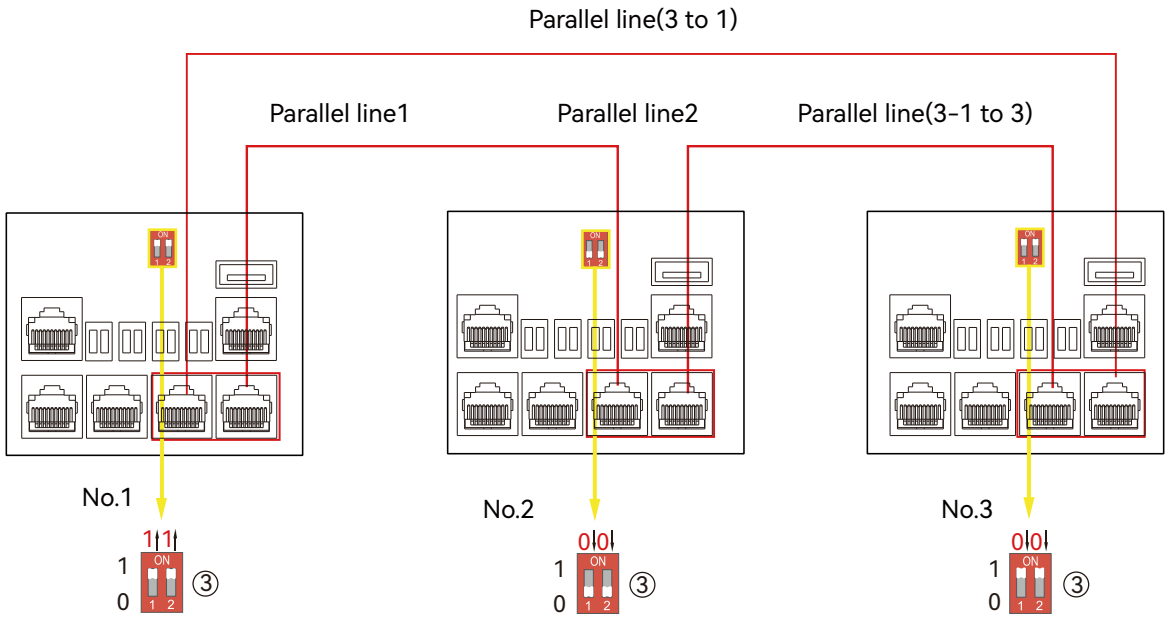

If the parallel cable is not enough or long enough, please make a straight pin to pin cable.

5.15.2 Parallel setting in monitor system

Operating Procedures

Setp 1. Set up monitoring for the system, add all dongles to one station. Users can login to visit the monitoring system, Configuration->Station->Station Management->Add a dongle to add dongles.

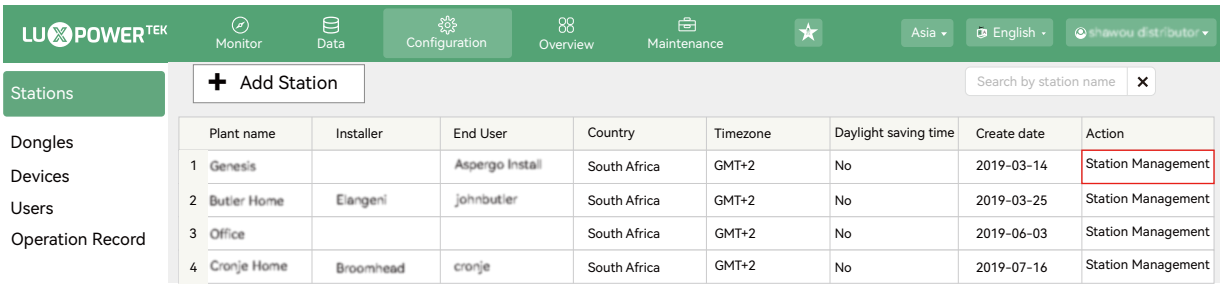

Setp 2. Set the system as a parallel group in the monitor system.

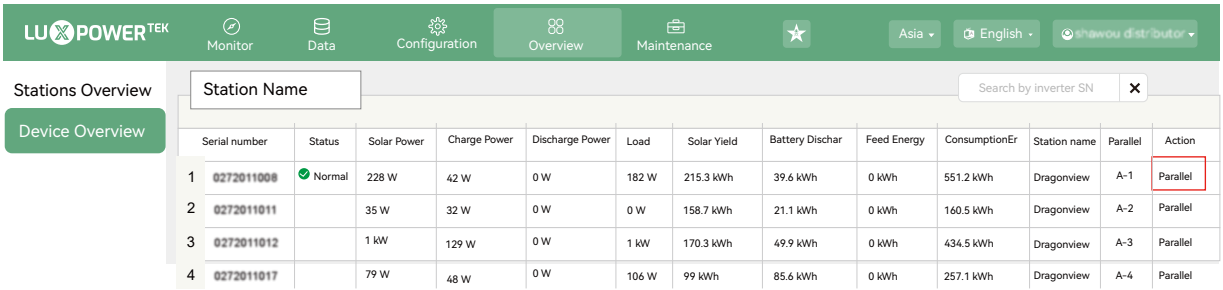

Please contact your inverter supplier for more detailed guidance for paralleling system.

5.15.3 Parallel Information Display

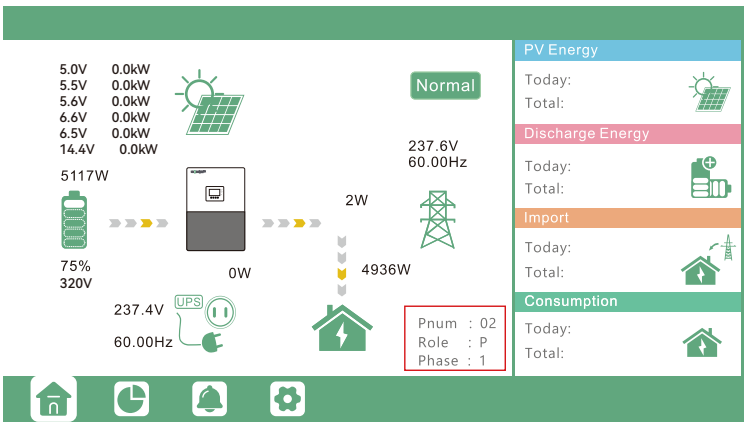

The information in the red box shows the parallel information.

Pnum: 01~03, display number of parallel units

Role: P or S, P means Primary and S means Subordinate

Phaes: 1~3, 1: R Phase, 2: S Phase, 3: T Phase

NOTICE

Notices for parallel system:

- Ensure the Generator is connected to all systems in parallel (if application).
- If you cannot divide the number of PV panels connected to each inverter, it is recommended to have more PV panels in the primary inverter.
- The values shown on the LCD of each inverter represent the inverter's contribution, not the system's total.

5.16 Monitor System Setup

5.16.1 WiFi/GPRS/4G/WLAN dongle connection

Users can use a WiFi/ WLAN /4G /2G dongle to monitor their inverter, and view the monitoring data on a computer or smart phone remotely.

To view data on smart phone, please download APP from the Google Play or Apple APP store, then login with their user account.

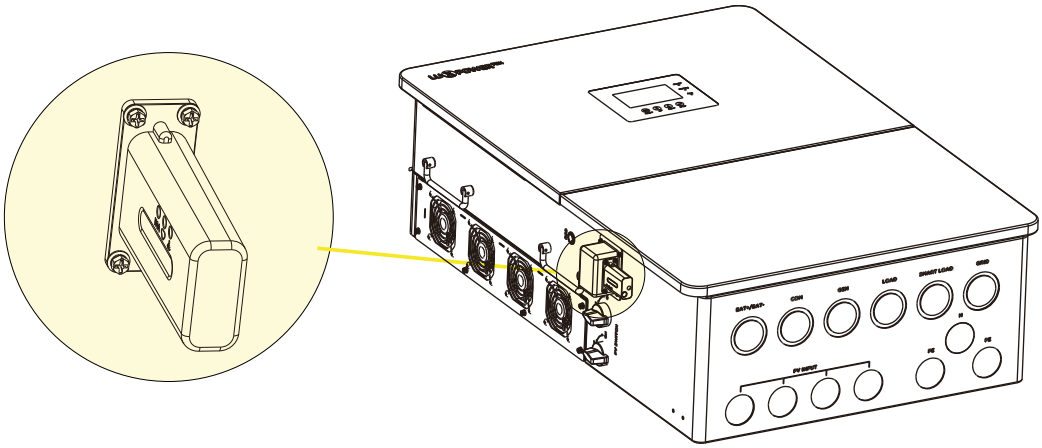

When installing the inverter, make sure that the dongle is connected to the inverter.

5.16.2 Setup the monitor system

1. Sign up an account on the mobile phone APP or Website

The “customer code” is a code we assign to your distributor or installer. You can contact your supplier for their code.

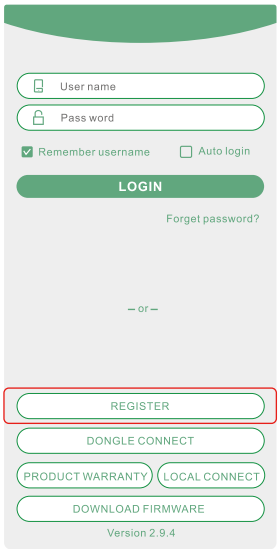

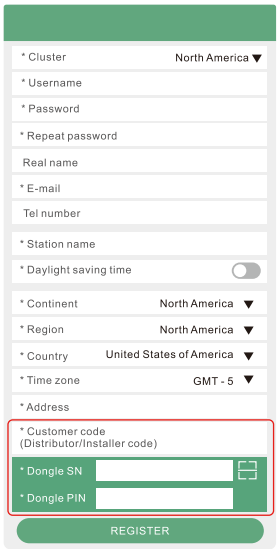

2. The station and wifi dongle will be created auto when you register, if you want have more stations need to be created, you can create as below

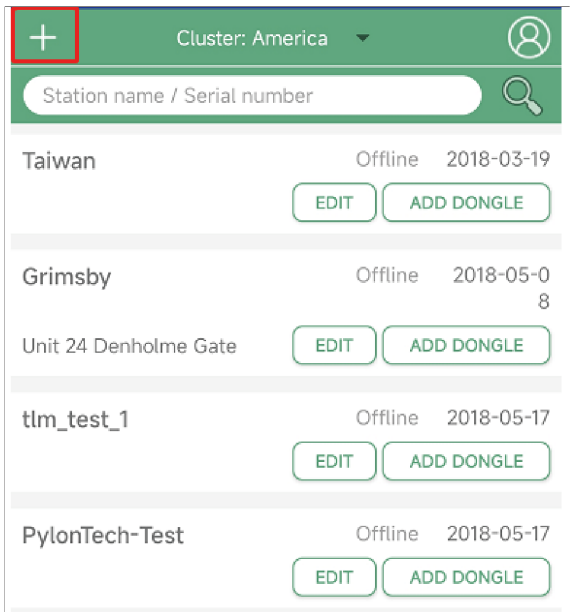

5.16.3 Set homewifi password to dongle

1. Connect your mobile phone to the “BAxxxxxxxx” wireless network where “BAxxxxxxxx” is the serial number of the WiFi dongle.
2. Click the “WiFi MODULE CONNECT” button on the APP.
3. Select the home WiFi that the WiFi dongle is to be connected to, and enter the WiFi’s password. And then click “HomeWifi Connect”. The WiFi dongle will restart and try to connect to our server automatically.
4. Check the LEDs’ status on the WiFi dongle. The middle light should be solidly lit when the WiFi dongle connects to our server successfully.

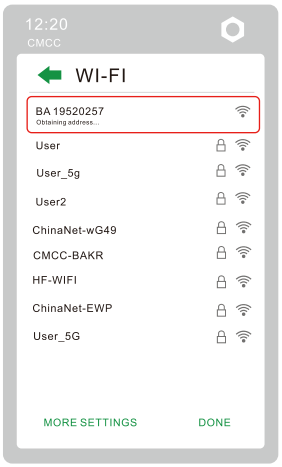

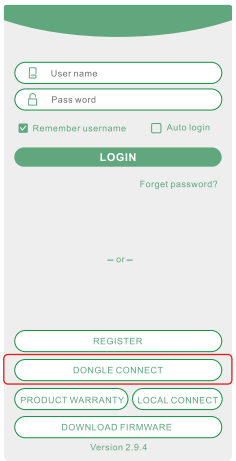

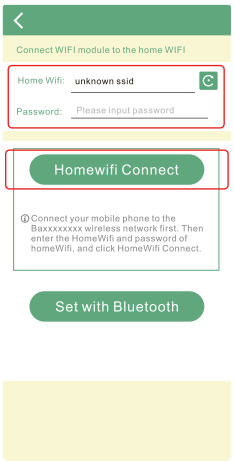

5. Now you can disconnect your mobile phone from the "BAxxxxxxxx" wireless network. Login on the APP with your account, you’ll find the inverter information already appears. Now you’ll be able to monitor and control the inverter remotely on any smart phone or computer that has an Internet connection.

Please download the following guides for setting up WiFi dongle and monitoring account at

Document Reference:

1. Wifi Quick Guidance

Quick guidance for setting connection of WiFi module to home WiFi, you can also find a printed version in the packaging of the WiFi module.

2. Monitor system setup for Distributors and Monitor system setup for endusers

Account registration, the description of each items and parameters, setting parameters

3.Monitor_UI_Introduction

Introduction of monitor interface

5.16.4 4G dongle monitoring setup

Customer should register the account as 3.10.2 first. Make sure you have put SIM card inside 4G dongle. Plug 4G dongle in, and 5 minutes later, you will be able to see your inverter online.

5.16.5 Third party RS485 communication

Meter 485B&485A: are used when the Meter is not connected. These two pins can be used to communicate with the inverter using our RS485 modbus protocol.

INV485: This interface is shared with the WiFi module. If the WiFi module is not in use, users can use this interface to communicate with the inverter.

Please contact your distributor to get the protocol for third party APP development.

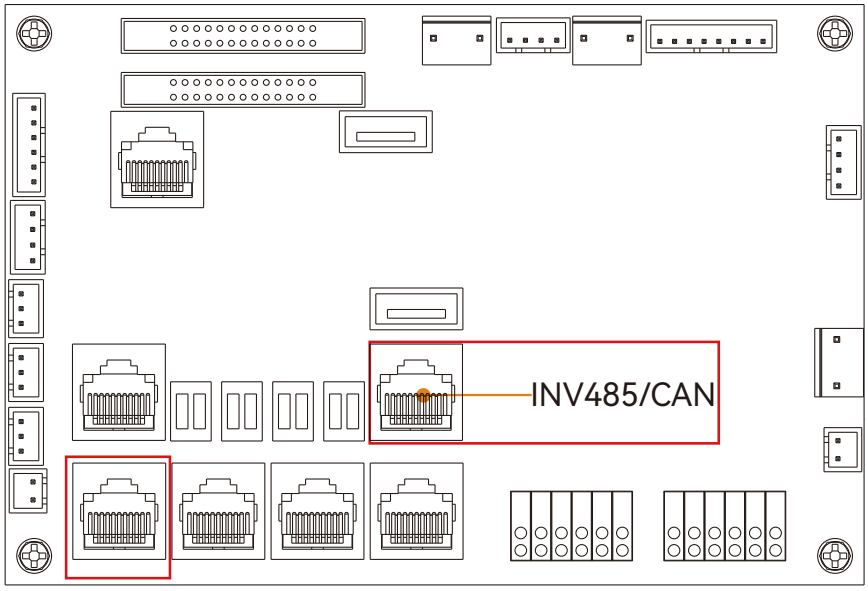

Meter

Pin	Description
1	485B
2	485A
3-8	/

6. Operation Guide

6.1 Operation Mode and Function

The inverter has different working modes and functions to meet customers' various demands. The working modes and functions are as below.

6.1.1 Self-usage Mode(Default)

In this mode, the priority order of load supply sources is Solar>Battery> Grid. The priority order of solar power usage is Load> Battery> Grid.

- **Application Scenarios**
  Self consumption mode will increase the self consumption rate of solar power and reduce the energy bill significantly.
- **Related Settings**
  Effective when Charge Priority, AC Charge, and Forced discharge are disabled.
- **Example**

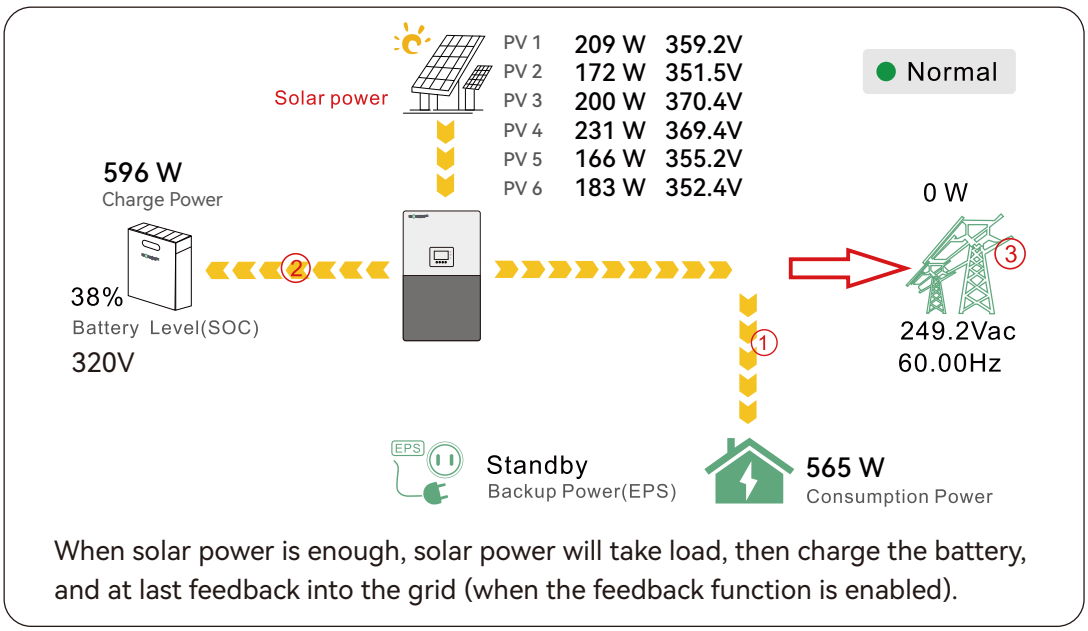

When solar power is enough, solar power will take load, then charge the battery, and at last feedback into the grid (when the feedback function is enabled).

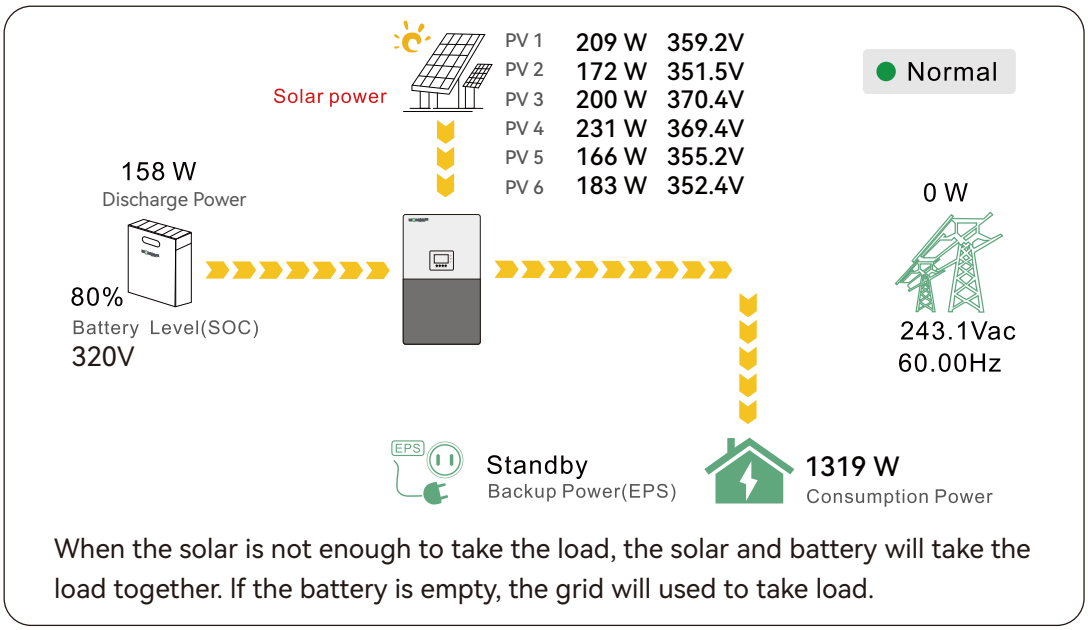

When the solar is not enough to take the load, the solar and battery will take the load together. If the battery is empty, the grid will used to take load.

6.1.2 Charge First Mode

The priority order of solar power usage will be Battery >Load >Grid. During the Charge Priority time period, load is first supplied with grid power. If there is excess solar power after battery charging, the excess solar power will take load together with grid power.

- **Application Scenarios**
  When users want to use solar power to charge batteries, grid power is used to supply loads.
- **Related Settings**

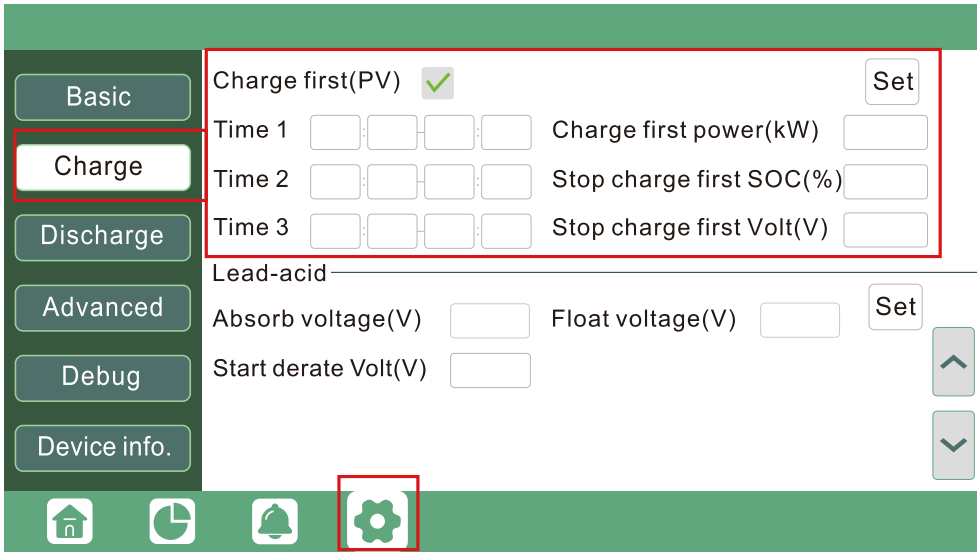

- **Example**

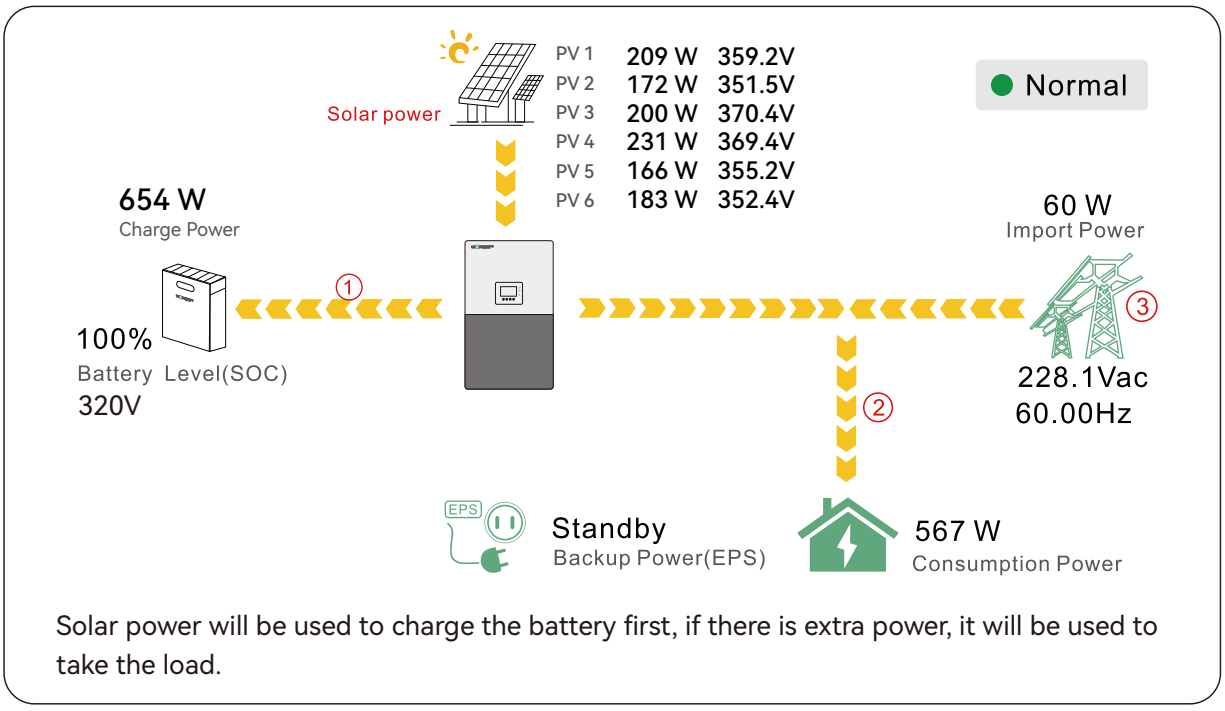

Solar power will be used to charge the battery first, if there is extra power, it will be used to take the load.

6.1.3 AC Charge Mode

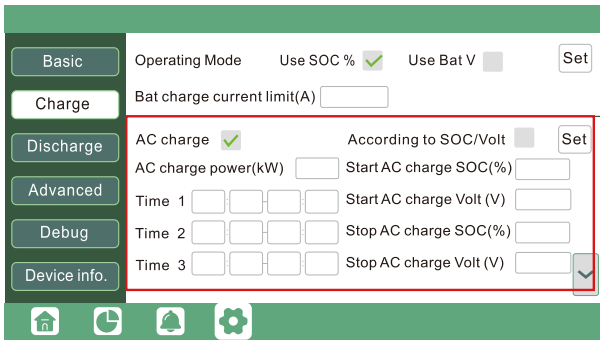

Users can charge batteries with grid power when electricity prices are cheap, and discharge battery power to supply load or export to the grid when electricity prices are high.

- **Application Scenarios**
  When users have a Time of Use (TOU) rate plan.
- **Related Settings**

6.1.4 Grid peak-shaving Function

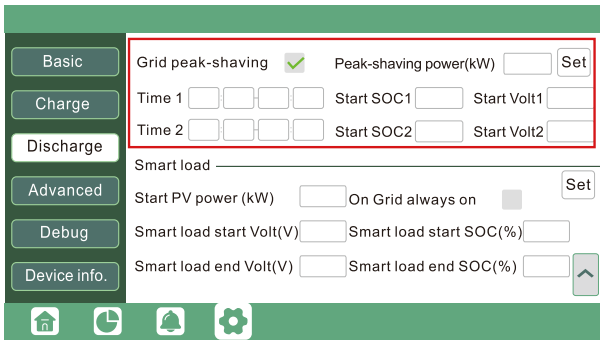

- **Grid peak-shaving 8 Grid peak-shaving power(kW):** Is used to set the maximum power that the inverter will draw from its grid power. And the Peak-shaving power needs to be set to more than 0.2(kW).

6.1.5 Smart load Function

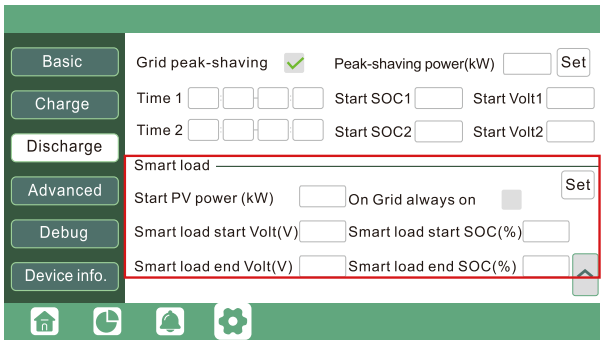

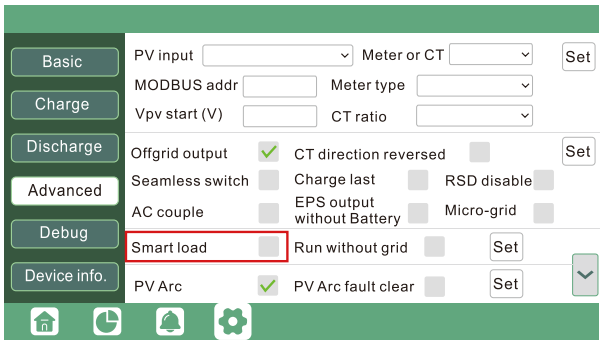

- **Smart Load:** If you enable it, inverter will supply power to this load when the battery SOC and PV power is above a user setup value. e.g. Smart load start SOC=90%, Smart load end SOC=85%, Start PV power=300W, it means: When the PV power exceeds 300W, and the battery system SOC gets to 90%, the Smart Load Port will switch on automatically to supply the load which is connected on this side. When the battery reaches SOC<85% or PV power<300w, the Smart Load Port switch off automatically.

Note:
If you enable the Smart load function, it's forbidden to connect the generator at the same time, otherwise the device will be damaged!

6.2 Rapid shutdown

The inverter includes a rapid shutdown system that complies with 2017 and 2020 NEC 690.12 requirements.

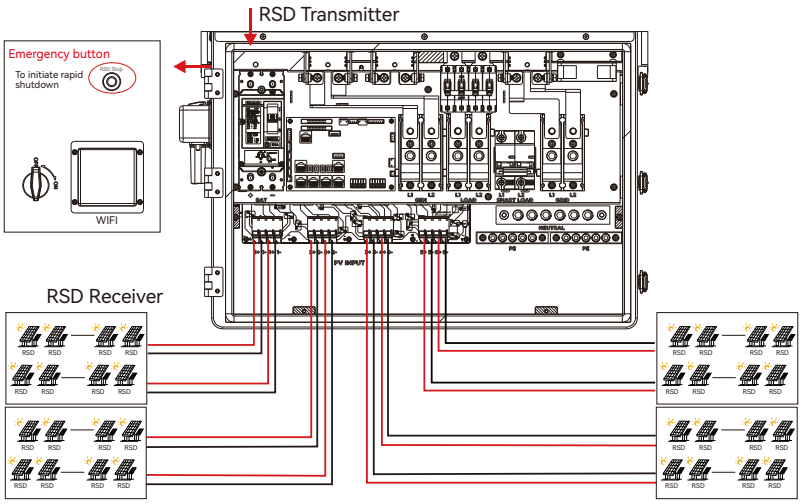

In case of emergency, press the rapid shutdown button that cut off the RSD power supply, thus stopping the inverter AC output, and the PV conductors voltage will be reduced to less than 30V within 30 seconds.

6.3 LCD Display

Users can view inverter running status, real time power, daily and accumulated energy information conveniently on inverter LCD. In addition to the above information, users can also check alarm and fault record on the display for troubleshooting.

6.3.1 Viewing information and alarm/fault record

- **Home Page**

  Touch the screen to light it up if it's in sleep mode. The Home page will appear on the display. Users will see a system overview diagram along with the real time information of each component, such as battery SOC, battery charging/discharging power, grid import/export power, load power, etc. On the right part of the screen, users can check daily and accumulated solar energy, battery charged/discharged energy, grid imported/exported energy, as well as load consumption.

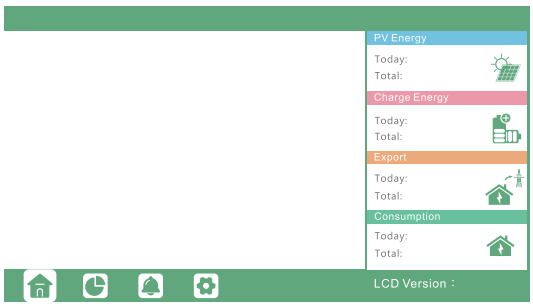

- **Detailed System Information**

  Click on the pie icon at the bottom of the screen and, you'll be able to view the detailed real time solar information, battery information, grid information and EPS output information.

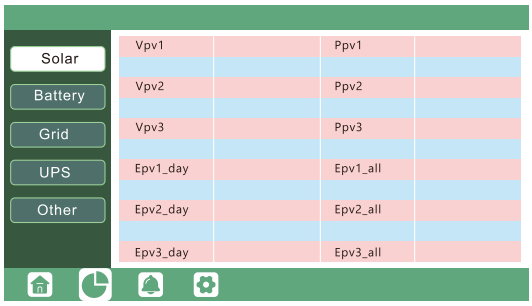

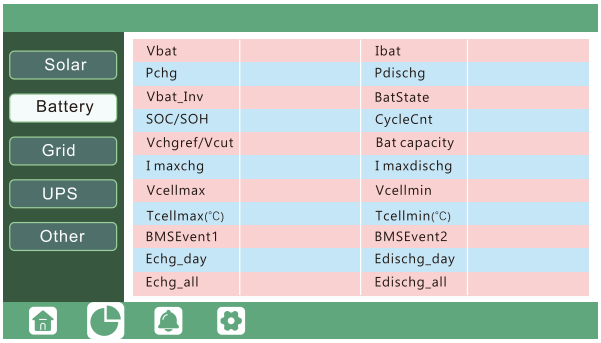

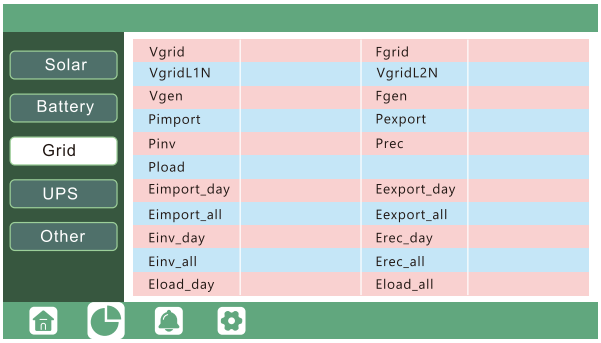

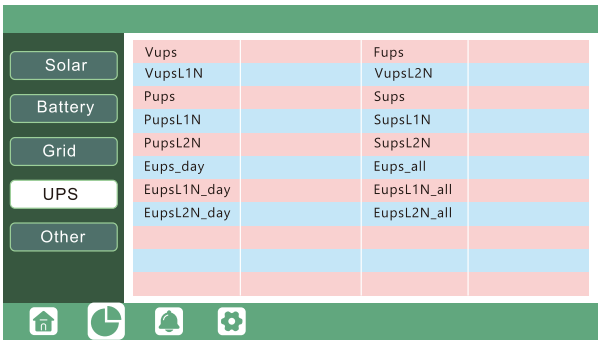

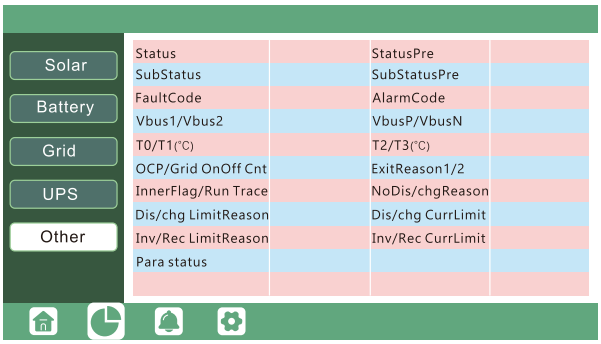

- **Fault/Alarm Information**

  Touching the bell icon at the bottom of the screen,you'll see all the current and historical fault&warning information on this page.

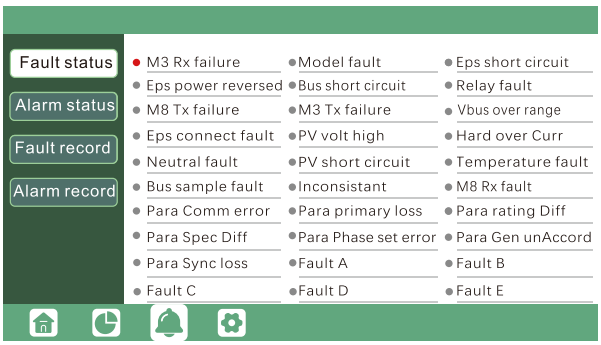

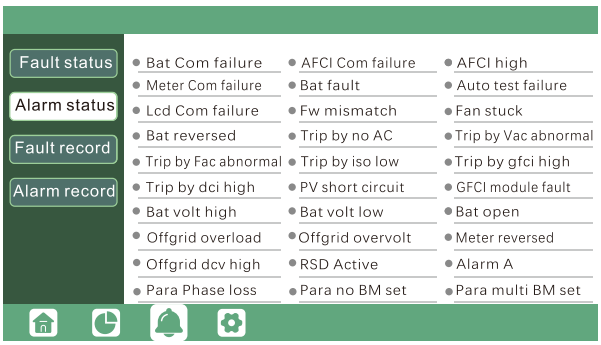

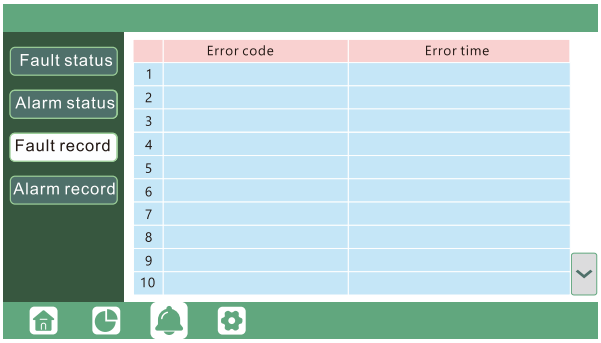

6.3.2 Setting Parameters

Clicking on the gear icon at the bottom of the screen, you'll get into the parameter setting page of the inverter.

a. Basic settings

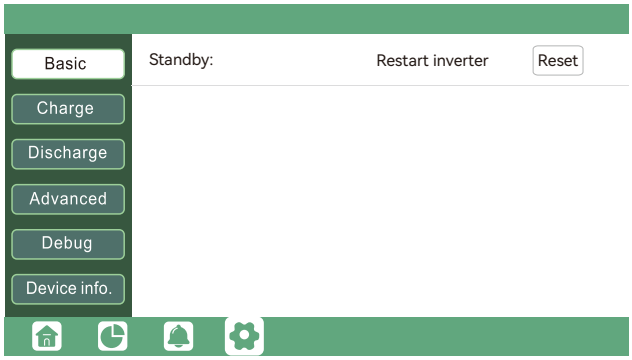

- **Restart inverter:** Restart the system, please note the power maybe interrupted when restarted.
- **Standby:** Is for users to set the inverter to normal status or to standby status. In standby status, the inverter will stop any charging or discharging operations, as well as solar-feed-in.

b. Charge setting

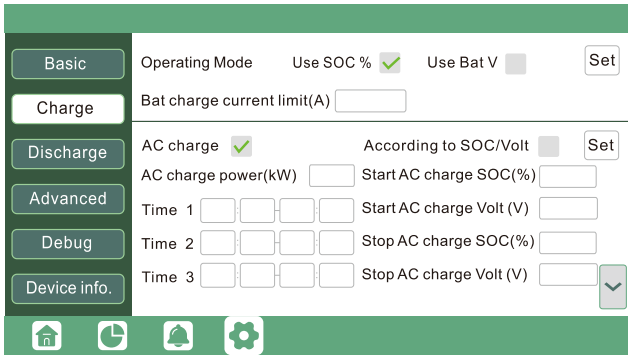

- **Bat charge current limit(A):** Users can set Max. charge current.

- **Operating Mode:** Users can decide to use SOC or BatV to control charge and discharge logic depending on battery type.
- **AC Charge:** Utility charge. configuration If users want to use grid power to charge their battery, then they can enable "AC Charge", set time periods when AC charging can happen, AC Charge power(kW) to limit utility charging power, and "Stop AC Charge SOC(%)" as the target SOC for utility charging. "Stop AC Volt(V)" as the target battery voltage for utility charging.

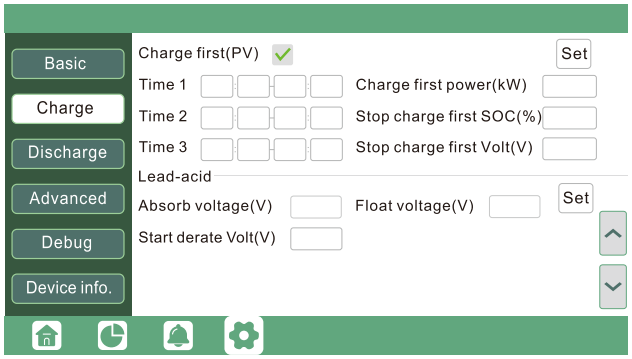

- **Charge first:** PV charge configuration. When using enable Charge first, PV will charge the battery as a priority, set time periods when PV charge can happen, charge first power(kW) to limit PV charge power, and "Charge first SOC(%)" as the target SOC for PV charge first, "Charge first Volt(V)" as the target battery voltage for PV Charge first.
- **Lead acid:** When using Lead-acid battery, you need to set parameters in these programs. Follow the battery manufacturer's recommendation.

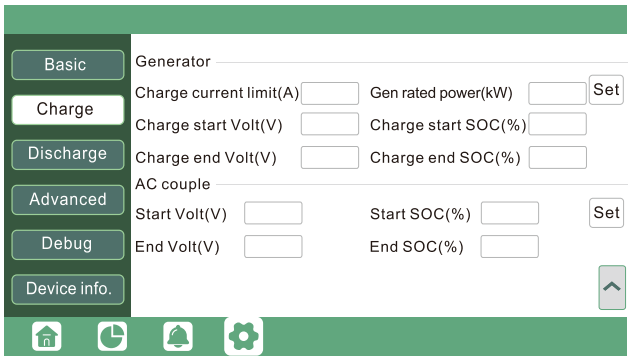

Generator

- **Bat charge current limit(A):** Set the Max. battery charge current from the Generator. The Generator will start charging according to the Charge start Volt /SOC, and stop charging when the battery voltage or SOC reaches the Charge end Volt/SOC value.
- **Gen rated power:** The battery charge power will be limited if the generator input power is greater than the set Gen rated power(kW).

c. Discharge setting

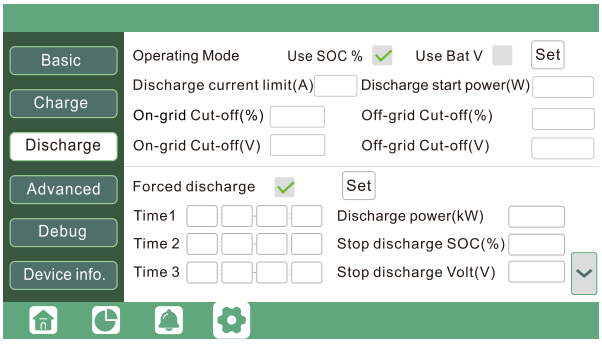

- **On-grid Cut-off(%) and Off-grid Cut-off(%)/On-grid Cut-off(V) and Off-grid Cut-off(V):**
  End of discharge SOC/Cut off voltage in on-grid and off-grid conditon respectively.

- **Discharge current limit(A):** The Max. discharge current from battery.
- **Discharge start power(W):** The Min. value can be set to 50. When the inverter detects the import power is higher than this value, battery start discharging, otherwise battery will keep standby.
- **Forced discharge:** Settings for battery force discharge within certain time period. In the preset time period, the inverter will discharge battery at the power set by “discharge power”, until battury SOC or voltage reaches “Stop discharge” value.
- **Operating Mode**
  You can choose “Use SOC %” or “Use Bat V” to control the battery discharge state.

d. Advanced setting

Advanced setting is mainly by installer after installation.

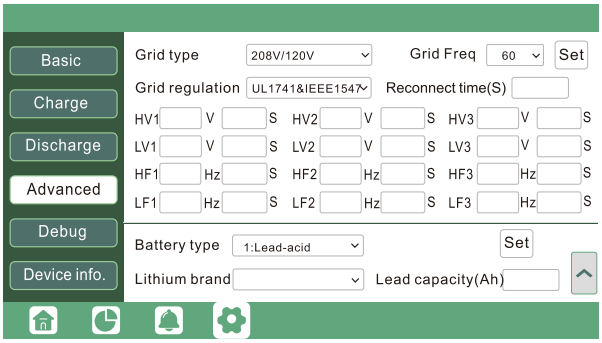

- **Grid type:** You can choose by yourself, 240/120V, 208/120V.
- **Battery type:** No battery, lead-acid or lithium-ion.
- If lead-acid battery is selected, please input correct battery capacity.
- If lithium-ion battery is selected, please choose the battery brand in the Lithium brand drop down list.

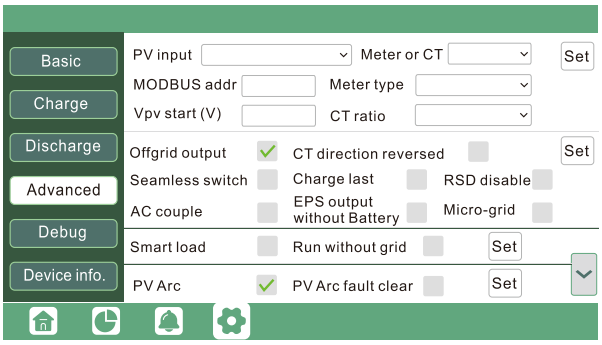

- **CT direction reversed:** If the CTs are in a wrong direction which will cause the display to show incorrect information and features of the inverter will not function correctly, the installer can modify it by selecting it (only for direction not CT 1 or CT 2 placement), there is no need to reconnect the CTs and no need to go change it physically, in the order of loads--grid export--battery charging.
- **Meter type:** Please select it according to the meter that’s to be installed.
- **Charge last:** When users want to us solar power in the order of loads--grid export--battery charging.

- **Offgrid output:** It is for users to set if the inverter provides backup power or not when the grid is lost. If users want the load to be seamlessly transferred to the inverter backup power, “Seamless switch” must be enabled. If customers don’t have a battery installed yet, but still wish to have inverter backup power with only solar panels connected, “PV Grid Off” can be enabled to use solar power to supply load when the grid fails or load-shedding happens. Micro-grid: only needs to be set when the generator is connected to the inverter’s grid port. With this option enabled, the inverter will use AC power to charge the battery and won’t export any power through the grid port if AC power is present at the inverter’s grid port.

The supported CT ratio is 1000:1, 2000:1, 3000:1, default CT ratio is 3000:1. If 3rd party CT is to be used, please ensure its CT ratio is one of them, and set it accordingly. The battery brand in the Lithium brand drop down list.

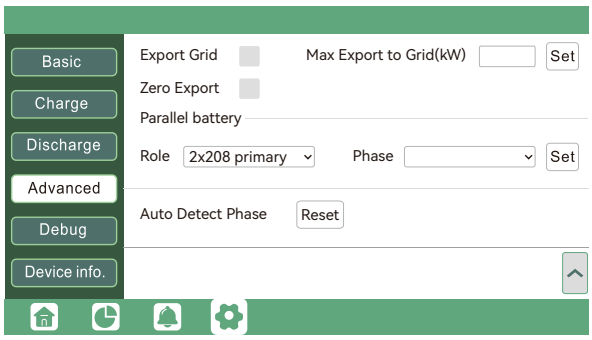

- **Role:** The Role setting of the parallel system. It is set to 1 phase primary by default. In a parallel system, only one inverter is allowed to be set as Primary, and the others are all Subordinate.
- **Phase:** This is the phase code setting of the EPS output. The system will automatically detect the phase sequence of the inverter (consistent with the phase sequence of the connected Grid mains) and display on the inverter after it is connected to the grid.

- **Export to Grid:** Is for users to set a zero export function. If exporting solar power is not allowed, users need to disable the "Export to Grid" option. If users' utility meter is tripped with even a little solar export,"Zero export" can be enabled Thus the export detection and adjustment will take place every 20mS, which will effectively avoid any solar power being exported. If export is allowed, users can enable "Export to Grid" and set a maximum allowable export limit in "Max. Export to Grid(kw)".

NOTICE

- All setting of parallel inverters need to be done in Standby or Fault Mode.
- If the system is connected to a lithium battery, the host of the lithium battery needs to communicate with the inverter which is set as Primary in the parallel system.
- Please keep all the setting are same for each inverter in the parallel system on the LCD or Web monitor.

7. Maintenance

7.1 Start and Shutdown the Inverter

Start the inverter

Operating Procedures

Step 1. Make sure the inverter is properly connected to the batteries, panels, grid, etc(see system wiring diagram)
Step 2. Turn on the battery system firstly, then turn on the built-in battery breaker.
Step 3. Turn on PV DC disconnect switch, make sure the PV voltage of the strings are higher than 140V, and check if the inverter works in PV charge or PV charge back-up mode.
Step 4. Make sure step1 to step3 above work properly before turning on the grid power or generator breaker.
Step 5. Turn on the built-in load breaker before providing power to EPS load.
Step 6. Turn on the built-in grid breaker or generator breaker, check if the inverter can go to bypass mode and on-grid mode normally.

Shut down the inverter

DANGER

Do not disconnect the battery, PV and AC input power under load.

If there is emergency issue, and you have to shut down the inverter, please follow the steps as below.

WARNING

After powering off the inverter system, there may still be residual electricity and heat in the enclosure, which could cause electric shock or burns. Therefore, it is recommended to wear insulated gloves and wait for 5 minutes after powering off the inverter system before performing any operations on it.

Operating Procedures

Step 1. Turn off the Grid breaker or Generator of the inverter.

Step 2. Switch off the load breaker.

Step 3. Turn off PV breaker and then battery breaker, waiting for the LCD to go off.

7.2 Regular Maintenance

To ensure the long term and proper operation of the inverter, it is recommended that regular maintenance is carried out as described in this section.

CAUTION

- Do not touch the inverter while it is operating. Certain parts may become hot during operation and can cause burns upon contact.
- Before performing any maintenances—such as system cleaning, electrical connection inspection, or grounding verification—ensure the system is completely shut down and the inverter has fully cooled.
- If the screen or LED indicators become difficult to read due to dust, clean them gently with a soft, dry cloth.
- Do not use solvents, abrasives, or corrosive materials to clean the inverter.

- **Inverter Maintenance**

  a. Check the inverter every 6 months or 1 year to verify if there are damages on cables, accessories, terminals and the inverter itself.

  b. Check the inverter every 6 months to verify if the operating parameter is normal and there is no abnormal heating or noise from the inverter.

  c. Check the inverter every 6 months to confirm there is nothing that covers the inverter heat sink, if there is, shut-down the inverter and clear the heat sink.

- **Battery Maintenance**

  Follow the manufacturer's requirements on maintenance. When you carry out these works on batteries, please make sure to fully shut-down the inverter for safety consideration.

7.3 Removing the Inverter

⚠ DANGER

Before removing the inverter, make sure all power sources are completely disconnected to avoid electric shock or short circuit.
This procedure must be performed by a qualified electrician.

Operating Procedures

Step 1: Power off the system

- Follow the steps described in 7.1 Power OFF the Inverter to ensure complete power disconnection.
- Verify that all indicator lights are off.

Step 2: Disconnect the cables

- Use a screwdriver to remove the PV connection cables.
- Carefully disconnect the battery and communication cables.
- Loosen and remove the AC input and output cables.
- Label each cable for easy reinstallation.

Step 3: Remove the inverter

- Hold the bottom of the inverter firmly with both hands, and use a Phillips screwdriver to remove the two mounting screws on the top and two on the bottom.
- Carefully lift and remove the inverter from the mounting bracket.

Step 4: Packaging and storage

- Repack the inverter using its original packaging materials if available.
- Store the device in a dry, ventilated, and dust-free environment.
- Do not place heavy objects on top of the inverter to prevent deformation or damage.

7.4 LED Displays

LED	Display	Description	Suggestion
Green LED	Solid lit	Working normally	
	Flashing	Firmware upgrading	Wait till upgrading complete
Yellow LED	Solid lit	Warning, inverter working	Need troubleshooting
Red LED	Solid lit	Fault, inverter stop work	Need troubleshooting

7.5 Troubleshooting

Troubleshooting Based On LCD Displays

Once there is any warning or fault occurring, users can troubleshoot according to the LED status and the warning/fault information on the LCD.

1. Fault on the LCD

If the dot on the left of fault item is red, it means the fault is active. When it is grey, it means the fault is defective.

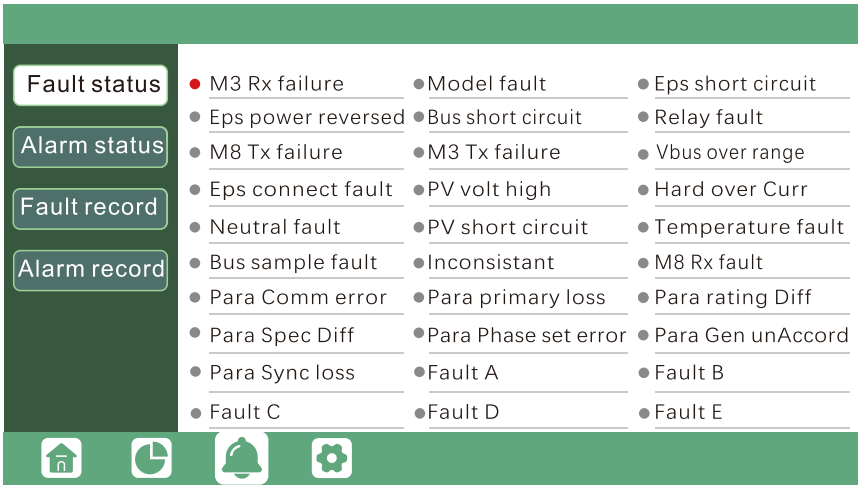

Fault	Meaning	Troubleshooting
M3 Rx failure	M3 microprocessor fails to receive data from DSP	Restart inverter, if the error still exists, contact your supplier.
Model fault	Incorrect model value	
EPS short circuit	Inverter detected short-circuit on EPS output terminals	1. Check if the L1, L2 and N wires are connected correctly at inverter EPS output port; 2. Disconnect the EPS breaker to see if fault remains. If fault persists, contact your supplier.
EPS power reversed	Inverter detected power flowing into EPS port	Restart inverter, if the error still exists, contact your supplier.
Bus short circuit	DC Bus is short circuited	
Relay fault	Relay abnormal	
M8 Tx failure	DSP fails to receive data from M8 microprocessor	
M3 Tx failure	DSP fails to receive data from M3 microprocessor	
Vbus over range	DC Bus voltage too high	Please check if the PV string voltage is within the inverter specification. If string voltage is within range, and this fault still appears, contact your supplier.
EPS connect fault	EPS port and grid port are connected mixed up	Check if the wires on EPS port and grid port are connected correctly. If the error exists, contact your supplier.

PV volt high	PV voltage is too high	Please check if the PV string voltage is within the inverter specification. If string voltage is within range, and this fault still appears, contact your supplier.
Hard over curr	Hardware leval over current protection triggered	Restart inverter, if the error still exists, contact your supplier.
Neutral fault	Voltage between N and PE is greater than 30V	Check if the neutral wire is connected correctly.
PV short circuit	Short circuit detected on PV input	Disconnect all PV strings from the inverter. If the error persists, contact your supplier.
Temperature fault	Heat sink temperature too high	Install the inverter in a place with good ventilation and having no direct sunlight. If the installation site is okay, please check if the NTC connector inside the inverter is loose.
Bus sample fault	Inverter detected DC bus voltage lower than PV input voltage	Restart inverter, if the error still exists, contact your supplier.
Inconsistant	Sampled grid voltage values of DSP and M8 microprocessor are inconsistent	
M8 Rx fault	M8 microprocessor fails to receieve data from DSP	
Para Comm error	Parallel communication abnormal	1. Please check whether the connection of the parallel cable is loose, please connect the parallel cable correcrly. 2. Please check and make sure the PIN status of CAN communication cable from the first to the end inverter rightly.
Para primary loss	No primary in the Parallel system	1. If a primary has been configured in the system, the fault will be automatically removed after the primary works. If so, you can ignore it. 2. If a primary has not been configured in the system, and there are only subordinate in the system, please set the primary first. Note: For single unit running system, the role of the inverter should be set as “1 phase primary”
Para rating Diff	Rated power of parallel inverters are inconsistent	Please confirm that the rated power of all inverters are the same, or you can contact service to confirm.
Para Phase set error	Incorrcet setting of phase in parallel	Please confirm that the wiring of the parallel system is correct first. In this case, then connect each inverter to the grid, the system will automatically detect the phase sequence, and the fault will be automatically resolved after the phase sequence is detected.
Para Gen un Accord	Inconsistent generator connect in parallel	Some inverters are connected to generators, some are not, please confirm that all inverters in parallel are connected to generators together or none of them are connected to generators.
Para sync loss	Parallel inverter fault	Restart inverter, if the error still exists, contact your supplier.

2. Alarm on the LCD

If the dot on the left of fault item is yellow, it means the fault is active. When it is grey, it means the fault is defective.

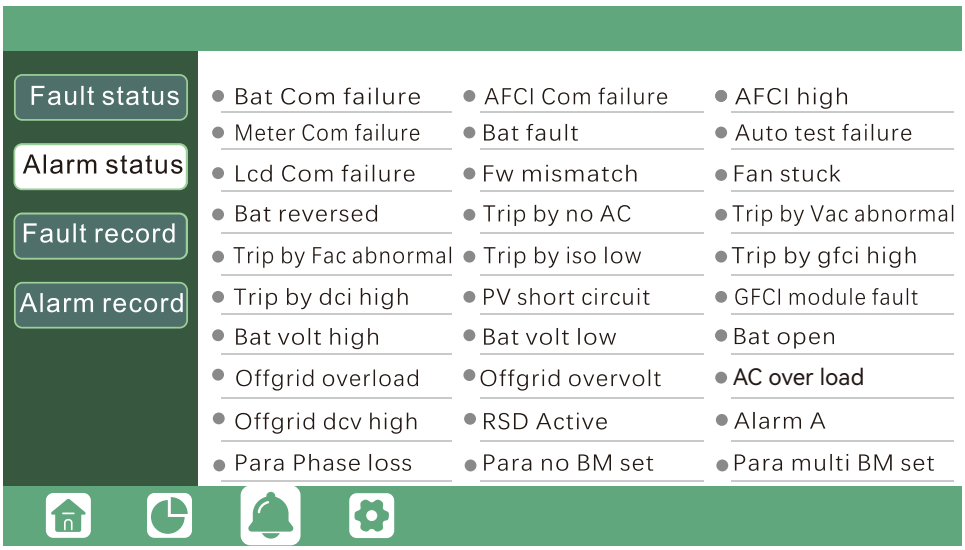

Alarm	Meaning	Troubleshooting
Bat com failure	Inverter fails to communicate with battery	Check if communication cable is correct, and if you have chosen the correct battery brand on inverter LCD. If all is correct but this error persists, please contact your supplier.
AFCI com failure	Inverter fails to communicate with AFCI module	Restart inverter, if the error persists, contact your supplier.
AFCI high	PV arc fault is detected	Check each PV string for correct open circuit voltage and short circuit current. If the PV strings are in good condition, please clear the fault on inverter LCD.
Meter com failure	Inverter fails to communicate with the meter	1. Check if communication cable is connected correctly and in good condition; 2. Restart inverter. If the fault persists, contact your supplier.
Bat Fault	Battery cannot charge or discharge	1. Check the battery communication cable for correct pinout on both inverter and battery end; 2. Check if you have chosen an incorrect battery brand; 3. Check if there is fault on battery's indicator. If there is fault, please contact your battery supplier.

Auto test failure	Auto test failed	Only applied to Italy model.
LCD com failure	LCD fails to communicate with M3 microprocessor	Restart inverter. If fault still exists, contact your supplier.
Fwm mismatch	Firmware version mismatch between the microprocessors	
Fan stuck	Cooling fan(s) are stuck	
Trip by gfci high	Inverter detected leakage current on AC side	1. Check if there is ground fault on grid and load side; 2. Restart inverter. If the fault remains, contact your supplier.
Trip by dci high	Inverter detected high DC injection current on grid port	Restart inverter. If the fault remains, contact your supplier.
PV short circuit	Inverter detected short circuited PV input	1. Check if each PV string is connected correctly; 2. Restart inverter. If the fault remains, contact your supplier.
GFCI module fault	GFCI module is abnormal	Restart inverter. If fault still exists, contact your supplier.
Bat volt high	Battery voltage too high	Check if battery voltage exceeds 450V, battery voltage should be within inverter specification.
Bat volt low	Battery voltage too low	Check if battery voltage is under 120V, battery voltage should be within inverter specification.
Bat open	Battery is disconnected from inverter	Check battery breaker or battery fuse.
Offgrid overload	Overload on EPS port	Check if load power on inverter EPS port is within inverter specification.
Offgrid overvolt	EPS voltage is too high	Restart inverter. If fault still exists, contact your supplier.
AC over load	The AC side is overloaded	Reduced the load until the warming disappears.
Offgrid dcv high	High DC voltage component on EPS output when running off-grid	Restart inverter. If fault still exists, contact your supplier.
RSD Active	Rapid shutdown activated	Check if the RSD switch is pressed.
Para phase loss	Phase losing in parallel system	Please confirm that the wiring of the inverter is correct. If the primary is set to 3 Phase primary, the number of parallel inverters needs to be ≥3. (And the grid input of each inverter should be connected with Grid L1, L2, L3 rightly). If the primary is set to 2×208 primary, the number of parallel inverters needs to be ≥2. (And the grid input of each inverter should be connected with Grid L1, L2, L3 rightly)
Para no BM set	Primary isn't set in the parallel system	Please set one of the inverters in the parallel system as the primary.
Para multi BM set	Multiple Primary have been set in the parallel system	There are at least two inverters set as Primary in the parallel system, please keep one Primary and the other set as Subordinate.

7.6 Fan replacement

Please check and clean the fans regularly. The recommended period is 6 months.

Please replace the fan following up the below diagram if there is problem with the fans. Turn off the system and wait for more than 5 minutes before disassembling the machine.

a. Loosen the screws and remove them.

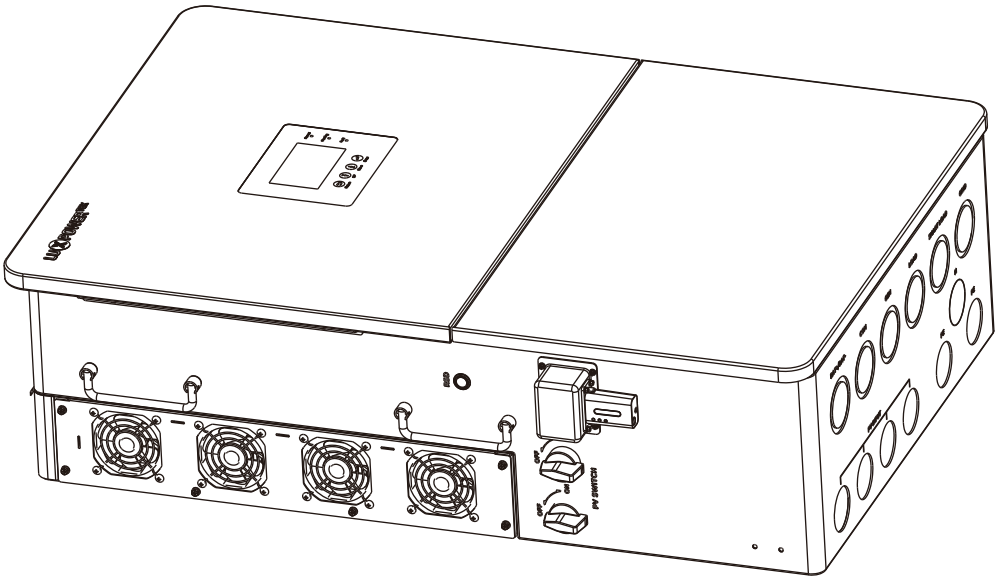

b. Remove the fan fixing.

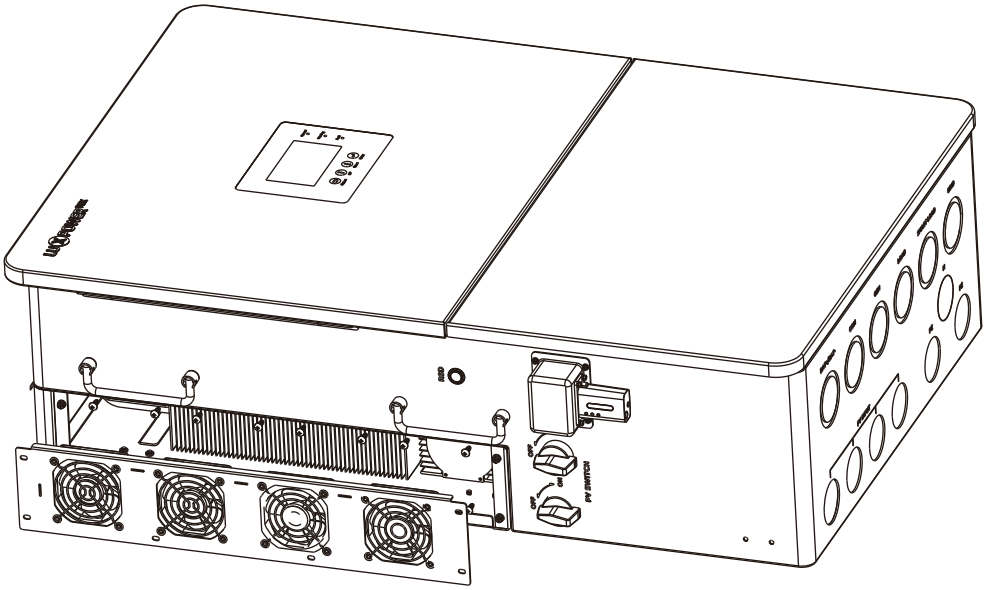

c. Pull out the fan bracket completely, and use a soft brush to clean the fan or replace a damaged fan.

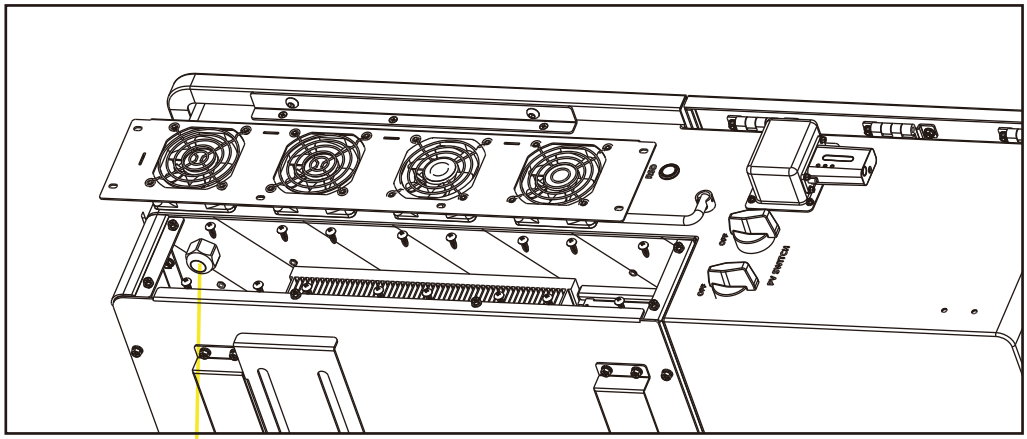

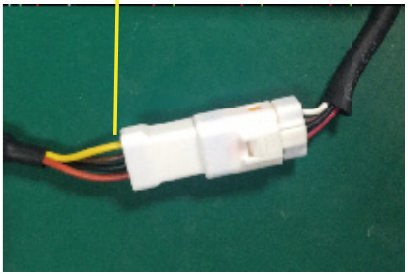

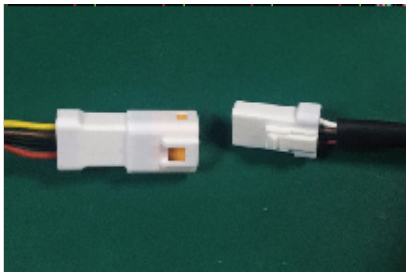

d. Remove the fan and replace it.

e. After the fan is installed, follow the steps just now to push back and assemble it back.

8. Annex: Lithium Brand Reference

Num	Lithium Brand Displayed on LCD	The Battery Brand
0	Lithium_0	Standard Protocol/Zetara/EG4
1	Lithium_1	HINAESS Battery
2	Lithium_2	Pylontech/UZ Energy
3	Rsvd	Rsvd
4	Rsvd	Rsvd
5	Lithium_5	GSL1 Battery
6	Lithium_6	Lux Protocol
7	Rsvd	Rsvd
8	Rsvd	Rsvd
9	Rsvd	Rsvd
10	Rsvd	Rsvd
11	Rsvd	Rsvd
12	Rsvd	Rsvd
13	Rsvd	Rsvd
14	Rsvd	Rsvd
15	Rsvd	Rsvd
16	Rsvd	Rsvd
17	Rsvd	Rsvd
18	Lithium_18	Fortress Battery
19	Lithium_19	Sunwoda Battery

Datasheet	25KW (Off Grid Hybrid)
Compatible Battery Type	Lithium-ion / Lead acid
Nominal Accepted Battery Voltage	120Vdc-454.Vdc
Recommended battery voltage	307.2Vdc
Battery Voltage Range (full range)	240Vdc ~ 450Vdc
Recommended battery capacity	20kWh-125kWh
Maximum Charging/Discharging Current	100A
Rated Charging/Discharging Power	25KW
Maximum Charging Voltage	454.4Vdc
Battery Communication	CAN
Input DC (PV Side)	
Max. DC Input Power for Single MPPT	12KW/12KW/6KW/6KW/6KW/6KW (6 MPPTs)
Maximum usable PV power	48KW
DC Input Voltage Range	120V ~ 550V
Nominal DC Input Voltage	360V
MPPT Operating Voltage Range	120V ~ 480V
Full Power MPPT Voltage Range	190~480V
Start in Votlage/Start-up Voltage	120V
Max DC Input Current	34A/34A/17A/17A/17/17
MPPT Number/(Strings per MPPT)	6(A:2/B:2/C:1/D:1/E:1/F:1)
Output AC	
Nominal Power	25KW
Nominal AC Voltage	240V/120V;208V/120
Operating voltage range	90Vac-135Vac/180Vac-270Vac
Max.continuous AC Current	104A/Split; bypass 200Amp maximum
Nominal AC Frequency	60Hz/50Hz
THDI	<5% @ full load
THDV	<3% @ full load
LRA	320A
Power Factor	+ 0.8(-0.8) to 1 (adjustable)
EPS Output - with Battery	
EPS Max. Output Power	25KW
EPS Nominal Output Voltage	240V/120V;208V/120
EPS Nominal Output Frequency	60Hz/50Hz
EPS Nominal Output Current	104A
Peak Power	2×rated power 10s; 1.5× rated power 20s
THDV	<3% @ full load
THDI	<5% @ full load
Switching Time	<15ms (Use Latch Relay)
Efficiency	
MPPT Efficiency	98.00%
Bat to Load Efficiency	96.60%
Inverter max. Efficiency	96.00%
CEC Efficiency	96.50%
Protection	
Anti-islanding Protection	Yes
AC Short-circuit Protection	Yes
Leakage Current Protection	Yes
Output over current protection	Yes
Grid Monitoring	Yes
PV DC Switch	Yes
Load Output Breaker	200A
Smart load breaker (and AC couple)	125A
Generator Breaker	IP65
Ingress Protect Degree	Yes
PV Insulation Detection	Yes
Over Current Protection	Yes
Over Voltage Protection	Yes
Battery Soft Start Protection	Yes
SPD Protection	Yes
Battery reverse polarity protection	Yes
PV Reverse Polarity Protection	Yes

AFCI PV	Yes
GFCI	Yes
RSD PV	Yes
AC Coupling	Yes
Parellel unit	6
Solar Inverter/Micro Inverter connected in	Yes
General Data	
Dimension(mm)(W*H*D)	626*924*285
Weight	73kg
Display	LCD
Topology	Tranformerless
Ambient Temperature Range	-25 ~ 60℃; (>40℃ , output derating)
Cooling	Intellgent control fan
Relative Humidity Range	0 ~ 100%
Max. Operating Altitude	4000, > 2000 Derating
Noise	55dB maximum
Communication from Inverter	SunSpec Modbus RTU over RS485, RJ45 for ext Wifi Dongle
Standard & Certification	
EMC	FCC Part15 Class B
Safety Standard	ULSTD 1741, UL1741SA UL1741SB, CRD PCS, CSIP, CSA C22.2 NO 107.1
RGM	PV production, AC output with built in CTs or sensors, Extra port for Ext RGM
SPD Protection	YES
Grid Certifications	IEEE1547.1-2018

NOTE

NOTE

YOUR RELIABLE ENERGY SOLUTION PARTNER

luxpowertek

Lux Power Technology Co., Ltd
Headquarter: +86 755 8520 9056
www.luxpowertek.com
Contact us: info@luxpowertek.com

092.20137AA